PROFESSIONALISM

QUALITY

SERVICE

WATER/SEWER DESIGN MANUAL

PHILADELPHIA WATER

VERSION 3.12

CITY OF PHILADELPHIA
WATER DEPARTMENT
DESIGN BRANCH

WATER & SEWER DESIGN MANUAL

(Version 3.12 issued 12/9/19)

APPROVED:

MANAGER, DESIGN BRANCH
Vahe Hovsepian, P.E.

APPROVED:

GENERAL MANAGER, PLANNING & ENGINEERING
Stephen J. Furtek, P.E.

Table of Contents

INTRODUCTION iv

SECTIONS:
1. Project Initiation 1-1
2. Water Contract Drawings 2-1
3. Sewer Contract Drawings 3-1
4. Water Technical Design Information 4-1
5. Sewer Technical Design Information 5-1
6. Contract Review 6-1
7. Contract Finalization 7-1
8. Consultant Billing 8-1

APPENDIX I (Procedures)
Water and Sewer Project Flow Chart a
Guidelines for Preparing Amendments b

APPENDIX II (Drawing Standards)
Drawing Size and Borders (Water) a
Drawing Size and Borders (Sewer) b
Title Block (Water Drawing) c
Title Block (Sewer Drawing) d
Line Styles e
Lettering f
Arrow Symbols g
Symbols for Water Main Fittings h
Standard Notes for Water Sheets i
Legend for Sewer Sheets j
Manholes, Inlets and Appurtenances k
Standard Notes for Sewer Sheets m
Symbols for Green Appurtenances n

APPENDIX III (Forms and Calculations)
Water Quantities Sheet a
Sewer Quantities Sheet b
Green Quantities Sheet c
GSI Preliminary Cost Estimate d
Final Design Package Checklist f
Contract Summary Sheet g
OEO post Award Compliance Form h
Project Status Summary Sheet i
Quantity Verification Sheet j

APPENDIX IV (External Organization's Requirements)
Legend for Fire Dept. Review of Hydrant Locations a
Highway Opening Permit Application (GPIS) b
ADA Handicap Ramp Design Guidance c
Highway Opening Guidelines d
PennDOT Highway Occupancy Permit e
Police Support for Utility Construction f
Philadelphia Gas Works (PGW)Agreement g
Roadway Grading Plan Procedure h
PennDOT Pre-EPS Submittal Form and Instructions i

APPENDIX V (Reference Plans and Information)
Preferred Inlet Locations a
Inlet Pictures b
Upper End Vent Pipe Picture c
Drainage Plat Map* d
Water Plate Map* e
1907 Standard Details for Sewers f
Streets Department Survey Districts* g
Highway Districts* h
State Highway Route Numbers (list) i
State Highway Route Numbers (map)* j
Wards* k
* Link to Google Earth KML Reference File

APPENDIX VI (Contact information)
Contact Information for City Departments and City and Private Utilities (Also see Section 6) a
PWD Contact Information b
District Surveyor Contact Information c
PGW Distribution Construction Areas Contact Information d

APPENDIX VII (D.I. Fittings)
Weight of Ductile Iron Fittings a

APPENDIX VIII (Flows & Velocities)
Velocities & Flow Capacities for Pipe Sewers a

APPENDIX IX (Sample Plans)
Sample Water Drawing a
Sample Combined Sewer Drawing(S-1) b
Sample Sewer Match Line Drawing(S-3) c
Sample Separate Sewer Drawing d
Sample Roadway Grading Plan e

Introduction

The objective of the Water and Sewer Design Manual is to promote uniformity in the presentation of Plans by establishing a general format and outlining detailed information which is required for the preparation of complete water and sewer contract drawings. This combination, in conjunction with a high standard of professional drafting technique, will preclude, to the greatest extent possible, any unnecessary work in the preparation of the plans. It will also assist the designer in avoiding errors and omissions which could consequently require extensive alterations and corrections.

The accuracy and completeness of all drawings will enable the Contractor to submit a sound equitable bid for the project and reduce the potential construction conflicts.

It is the intent of this manual to give guidance for the orderly preparation of final construction plans. The methods, procedures and examples are to be followed so as to promote consistency in the preparation of Plans. This manual may be used as a general guideline only. Engineers and design professionals should not solely rely on these guidelines, but must always use their professional judgment in the development of plans and specifications. This manual is not intended nor should it be used in substitution for the judgment of engineering and design professionals. It remains the sole responsibility of the design professional to develop plans which are consistent with all laws and regulations and which are based on sound engineering judgment. Compliance with the guidelines contained in this manual does not assure design acceptance by the Water Department. The Water Department will exercise its best professional judgment, on a case by case basis, in its review of each design application.

The Engineer will be required to perform a field visit of each project site to obtain the physical features as well as acquaint himself/herself with any unusual requirements of the location which may be important in the preparation of the design or specifications for the project.

This document supersedes any previous Water and/or Sewer Design Manuals. In order to provide an overview of the various design steps and the order in which they are performed, enclosed with this document is a project flow chart (see Appendix Ia [1]). The flow chart schematically represents the general process of projects from initiation to completion, for both water & sewer projects.

In order to provide a reference of the type of construction of sewers done at the turn of the century, a copy of the 1907 Sewer Standard Details is included in Appendix Vf [2]. These details should be used as a reference to further understand the existing sewer system. These details do not purport to accurately describe or show the exact configuration of any specific sewer, but rather to demonstrate the type of construction used at the time of the construction of many of the sewers we are presently replacing.

All illustrations of lettering, line weight, etc. shown in the appendices and sample drawings are to be used as a template for CAD drawings. All drawings by consultants shall be prepared on a CAD system and all files shall be submitted electronically along with Mylar type prints to the Water Department upon design completion.

Project Initiation

1

A. Work Numbers

1. Water & Sewer project locations are typically initiated in our Planning and Research section, where water main break histories and sewer examination reports are evaluated. Locations are then grouped together, where appropriate, into contract packages and forwarded to the Design Branch and/or to Engineering Consultants.
2. When received by the Design Branch these packages are given a work number (contract number). For locations which require no sewer work, a water work number will be assigned in the W-20000-D series. For a contract which includes sewer work, a number will be assigned in the S-40000-RD series. The prefix signifies whether it is a water only contract (W) or a contract containing sewer work, with or without water work, (S). The suffixes have the following meanings:

   A - Sewer for New Development (Assessable or Private Cost) See Section 3 D.2.d.1) [3]

   B - Sewer to Relieve Unsanitary Conditions (Assessable or Private Cost) See Sect 3 D.2.d.1) [4]

   C - Water Main Construction (Assessable or Private Cost) See Section 2 D.1.b.1) [5]

   D - Distribution System Rehabilitation

   E - Eastwick Urban Renewal (Obsolete)

   F - Storm Flood Relief Sewer

   G - Green Infrastructure

   H - High Pressure System Rehabilitation (Obsolete)

   I - Sewer and/or Water for Industrial Development

   M - Reinforcing Mains

   O - Water or Sewer Operations

   P - Pattison Ave Food Center (Obsolete)

   R - Reconstruction of Existing Sewer

   S - Swanson St. Pump Station (Obsolete)

   X - Contracts including Streets Department Paving Items

   Y - Sewer Maintenance Yard (Obsolete)
3. Work numbers will be assigned only by the Design Branch front office staff but will be provided to Consultants when they are assigned a project.
4. Work numbers should be used on all correspondence or other material related to that particular project or contract.

B. Service Information

1. Once the work number is assigned, the service information is obtained for contracts with water main relay work. The service list is obtained from our billing records, and not from an actual field survey. These records are based on billing addresses; therefore the actual location of the service pipe shall be verified in the field by the designer. Additional service information, if required, may be requested from the Customer Service Unit at 29th and Cambria Sts.
2. For projects done by consultants, the service lists from our billing records will be ordered by the Water Department and forwarded to the consultant.

C. Utility Information

1. For In-House Projects, once the work number is assigned, the front office staff orders the utility information using the “one call” system. In addition, the City Plan and Highway Supervisor’s plans are obtained from the Streets Department. All the utility information is compiled into “utility bags”. Upon receipt of all the requested information the “utility bag” is forwarded to the Drafting and Technical Pool to begin the base plan(s).
2. For projects done by consultants all this information will be ordered and obtained by the consultant.
3. The City Plan contains the official curbline and houseline footprint of a given location. This will be used as the footprint of the base plan and confirmed during the field visit.
4. The utility information obtained from the individual utilities shall be placed on the base plan. The Highway Supervisor’s plan should not be used for that purpose, but rather as supplementary information.

Water Contract Drawings

2

A. Drawing Size

1. Sheet - 24" x 36"
2. Inside Border 23" x 34" (1-1/2" from left, 1/2" from top, bottom, right) (See Appendix IIa [6])
3. Title Block - 5" x 9" located in lower right hand comer (See Appendix IIc [7]).

B. Materials

1. Final Drawing shall be on Mylar type material.
2. Mylar shall be .004 inch thick polyester base and matted on both sides.

C. Drafting

1. Scales
   a) Plan - 1" = 20' except as otherwise specifically approved.
   b) On new construction, where 1" = 30' scale can reduce the number of sheets, it may be used, with the approval of the Water/Sewer Engineering Supervisor.
   c) Cross Sections – 1/4" = 1'-0 or as otherwise appropriate
   d) Profile (where required) –Horizontal: match plan
   Vertical: 1" = 5'
2. Lettering
   a) All text size, style and orientation shall conform to the examples shown in Appendix IIf [8] except the size of the call out for the proposed water main in the featured street shall be 0.24” and the style and orientation shall be as shown in Appendix IXa [9].
   b) Title block information shall be as shown on Appendix IIc [10].
   c) Existing utilities shall be indicated using upper and lower case lettering and shall be slanted. The word existing shall not be used.
   d) Proposed work shall be in bold upper case letters without a slant.
   e) The word proposed shall be used in the plan and cross sections to only call out the proposed water main and proposed sewer. It should not be used with any appurtenances (like manholes, collars or inlets) but the letters calling out the appurtenances should still be bold upper case. See the Sample Plans shown in Appendix IX [11].
   f) All streets shall be kept clear of notes as much as possible. The name of the street shall be placed along the top of the sheet. No abbreviations shall be used on the street.
   g) The words street, road, avenue, etc., should be spelled out on streets and abbreviated on intersecting streets.
   h) For Private Cost Contracts, the words "PRIVATE COST" in a 0.24” Arial font shall be placed above the title block.
   i) The words "AUTHORIZED BY ORDINANCE OF COUNCIL" (where applicable [12]) shall be 0.175”.
   j) The words “PRELIMINARY ASSESSMENT” (where applicable [13]) shall be 0.14”.
3. Line weights and styles shall be as shown in Appendix IIe [14]

4. Symbols and Abbreviations
    a) Symbols and abbreviations shown in Appendix II [15] shall be used.
    b) Although no legend is shown on the water sheets, the symbols and abbreviations used shall be the same as on the sewer sheets as shown in Appendix IIj [16].
    c) Any other symbols and abbreviations shall be defined on the Contract Drawings.
5. Drawing Orientation
    a) The drawing should be generally oriented with the street on the sheet being oriented horizontally across the sheet, and north being oriented towards the top of the sheet (the north arrow should point towards the top of the page). In the rare instance that a street is exactly north – south the north arrow should point towards the right.
    b) When part of a joint water and sewer contract, the water drawing shall be oriented the same as the sewer drawing.
6. Cross Sections
    a) All water drawings shall contain a typical cross section. Drawings shall contain more than one cross section if the underground structures or utilities change substantially such as under a bridge.
    b) On a joint water and sewer contract, the water cross sections shall match those of the sewer drawings.
    c) On a water only contract, all cross-sections on a given street shall be taken in the same direction.

D. Water Base Plan Information

1. City Plan Information
    a) Houseline distance, street (cartway and footway) and Right-of-way widths, name of street and state route number if it is a state highway (see Appendix Vi for a list of state highways and their accompanying state route numbers [17]).
    b) City Plan Elevations as well as existing surface of ground shall be shown on Assessable and Private Cost water projects.
        1) {5} An Assessable water project is one where there is no existing water main and the project is being funded by the City (See Section 2 D.2.c.1) [18]. A Private Cost water project is one where there is no existing water main and the project is being funded by a developer. It has no Assessment. For Private Cost Contracts, Developers should refer to the Private Cost Contract Requirements.
    c) Street Status - Legally open or not legally open; at grade or not at grade, only label if not legally open or not at grade.
    d) Cartway and footway widths shall be dimensioned.
2. Pertinent Information
    a) The Consultant's name shall be shown on the base plan to the left of the title block stipulating who prepared the base plan and/or design. The base plan and/or design completion date shall be shown directly beneath the Consultant's name. For consultant's projects the drawing shall be stamped by a registered Professional Engineer in the state of

Pennsylvania. If only the base plan or design was prepared by the consultant, the wording should reflect such.

b) {12} {21} The words "AUTHORIZED BY ORDINANCE OF COUNCIL" shall be placed above the title block on base plans when the street has no City water main and one is being proposed.

c) {13} {22} {103} Except for private cost projects, the words "PRELIMINARY ASSESSMENT" shall be placed at the bottom center of each sheet, on base plans when the street has no water main and one is being proposed. For assessable projects, drawings shall be sent to the District Surveyor to obtain the preliminary assessment. See Section 6 D.12. [19] and Appendix VIc [20]

1) {18} An Assessment is a charge to the property owner for the installation of a water main and/or sewer. It is based on the length of frontage with deductions for corner properties.

d) Miscellaneous information that shall be provided on each plan drawing.

1) Ward number
2) "One Call" Numbers
3) Water Plate Number
4) Highway District Number
5) Survey District Number
6) Ordinance Date (if applicable [21])
7) Preliminary Assessment (if applicable [22])
8) GPIS Number

e) The drawing's title block should always contain the date that the most recent changes were completed.

f) The title block of each sheet shall indicate the limits of work represented on that particular sheet. In many cases this will not be the entire length of the project.

g) On Water Only projects the title block shall read as follows:

1) For north-south streets the title block shall read from south to north.
2) For east – west streets between two streets starting with a letter the title bock shall read from west to east (i.e. from A St. to B St.).
3) For east – west streets between two numbered streets the title bock shall read from east to west (i.e. from 2nd St. to 3rd St.). The anomaly is the title block for Front St. to 2nd St. which shall also read from east to west. Note: Even though the title block reads from east to west, the drawing will always be just the opposite (i.e. 3rd St. will be on the left side of the sheet and 2nd St. will be on the right side of the sheet). This is because north always has to be towards the top of the sheet.

h) On Water and Sewer projects the title blocks on Water sheets shall follow the same direction as the Sewer sheets.

3. Plan View Information

a) Paving Information

1) Existing footway, curb and roadway material shall be fully identified.
2) Driveway, tree wells and curb ramps shall be indicated.

3) Footways, if special pattern (particularly brick), shall be carefully identified.
4) Deteriorated footway shall be noted.

b) Traffic Information
1) Direction of traffic along with parking information shall be shown on all streets including intersecting streets. Symbols used shall be as shown on the sample drawings in Appendix IX [23]. As shown in Appendix IIg [24] the number of operating lanes in each direction is represented by the number of arrows. Parking or no parking is written above or below the line indicating which side of the street has which.

c) Labeling
1) Mains in streets within six (6) inches of City Plan grade or in Right-of-way shall have their depth specified ("cover").
2) Mains in new streets or in streets known to be not at confirmed grade, labeling of the proposed main shall be discussed with the Water/Sewer Engineering Supervisor.

d) Above Ground Features
1) Steps, cellar doors, fire hydrants, parking meters, trees (including diameter), manhole covers, traffic signs and signals, utility poles, and all street furniture (phone booths, mailboxes, benches, etc.) shall be identified as shown in Appendix IIj [25].
2) All existing water curb stops, sewer vent boxes, and gas curb boxes shall also be identified as shown in Appendix IIj [26].
3) Property lines shall be indicated, along with sufficient street addresses to identify all properties. The address label shall be parallel to the street it is related to. The street name should be added to the address if it is not obvious (like on a parallel street or similar addresses on intersecting streets).
4) All lots not containing structures shall be so labeled (open lot, parking lot, etc.)

e) Overhead bridges shall be shown and the elevation of the underside of the bridge shall be indicated on the base plan.

f) Match lines shall be shown on base plans when required as shown on the sample in Appendix IIf [27] and Appendix IX [28].

g) All street grades along the gutters shall be indicated. The direction of stormwater gutter flow shall be indicated by placing arrow heads on the curbs pointing in the downgrade direction as shown on the sample in Appendix IXa [29].

4. Misc. Field Information

a) The final design and specifications are very dependent on the field investigation, and the information obtained from the field visit. The engineers and/or designers which visit the field location should pay special attention to the visible details of the block which may be useful in later making design decisions. Examples of such items are:

- Condition of paving, signs of paving disruptions due to Water Department infrastructure failures, etc. This information will assist in establishing appropriate paving limits.
- Evidence of hydrant relocations or damaged or knocked over hydrants. This information will assist in locating new hydrants.

- Potential construction interferences such as low bridges, tree interference, overhead wires or structures, etc.
- Condition of homes, are any vacant or collapsing, etc.
- These are a few examples of the type of information required to properly design a contract.

5. Utility information shall be given as follows:
   a) Each Utility shall be identified in the following order: Water, H.P.F.S., PECO, Sewer, Verizon, Gas, Streets-Traffic, SEPTA, Public Property-Communications, Public Property-Transit, Western Union, and Cable TV. See Section 6 [30] [31] and/or Appendix VI [32] for contact information, if required.
   b) Each utility shall be located from the face of the curb to the centerline of the utility as shown on the examples in Appendix IX [33].
   c) Show all existing water main valves and other utility manholes using the symbols shown in Appendix IIh [34].
   d) Indicate duct bank or pipe size as width x height except sewer which shall be height x width.
      1) Brick sewers shall be labeled in feet and inches (e.g. 2'-6" x 1'-8")
      2) Manufactured pipe shall be labeled in inches (e.g. 36" RCP)
      3) Box sewers, whether brick or reinforced concrete shall be labeled in feet and inches. The above nomenclature, if used consistently, assists in quick identification and approximate dating of the sewer.
   e) Each former utility (i.e. Keystone, City Transit, PTC) if so identified on manholes or the highway supervisor's drawing shall be indicated and identified by its current owner (i.e. Verizon, SEPTA). Each time a former utility is encountered it must be investigated individually. For example do not assume that PTC is SEPTA without confirmation from SEPTA.
   f) Cover for all utilities shall be indicated to the outside top of the conduit. The cover to the top of the sewer is calculated by determining the depth to the invert bottom and subtracting the height and then subtracting the thickness of the crown. Unless the thickness of the crown of a brick sewer is shown on record plans, it shall be assumed to be 9”. This should be done at each manhole. If the cover varies by less than 6”, use the shallower cover. If the cover varies by more than 6”state the cover varies from min. to max.
   g) All information shall be correct at the point identified. If size changes, or if cover changes at a specific point, and if either is relevant to the design they shall be labeled as often as required.
   h) High voltage electrical conduits shall be separately labeled with voltage and boxed in.
   i) SEPTA and railroad tracks shall be shown as accurately as possible, but not dimensioned. Their status (active, inactive, paved over) shall be stated. Ties for railroad tracks shall be shown and ties for trolley tracks shall not be shown.
   j) Utility lines shall be drawn using the type of line shown in Appendix IIe [36].
   k) Existing sewer inlets shall be accurately shown using the symbols in Appendix IIk [37].

l) Utilities other than water, sewer, and gas shall be shown as double line when their width is 42" or greater.

m) Existing sewers with a width of 24” or over shall be shown as double line and include a center line for dimensioning. Existing sewers with a width of less than 24” shall be shown as single line, unless the sewer is brick or is part of a separate system. All existing brick sewers shall be shown as a double line. In a separate system where the stormwater conduit is located directly over the sanitary sewer, the sanitary sewer shall be shown as a single dashed line and the stormwater conduit shall always be shown as double line.

n) All water mains and gas lines 24" or greater in diameter shall be shown as double line.

o) Abandoned utilities shall be labeled "abandoned" except abandoned water mains shall not be drawn on the plans.

E. Proposed Water Main

1. Plan View (Contract Plans)
   a) The proposed water mains shall be located and dimensioned from the centerline of the proposed water main to the nearest curb line.
   b) All proposed valves and fittings shall be shown.
   c) Match lines shall be shown on all Contract Plans, where applicable.
2. Cross Section (Contract Plans)
   a) The proposed water main shall be shown in the correct location in the cross section. The proposed water main shall be dimensioned from the center line of the proposed main to the curb line and identified.
   b) Where there is a railroad bridge shown on the base plan, a cross section at the railroad bridge with underside elevations showing the proposed water main shall be shown. Bridge foundations shall also be shown.

F. Sample Drawing

1. **Appendix IX** [38] shows a sample water drawing which demonstrates the final look of the drawings. **Take note of the general look and character of the drawing.** Also notice the lettering style, line widths and scales. **Additionally, see Appendix** II [39] for “Drawing Size and Borders (Water)”, “Title Block (Water Drawing)”, “Symbols”, “Lettering”, “Line Styles” and “Standard Notes for Water Sheets”.

Sewer Contract Drawings

3

A. Drawing Size

1. Sheet - 30" x 42"
2. Outer Border - 29" x 41" (l/2" from left, 1/2" from top, bottom, right)
3. Inside Border - 27" x 39" (1" from left, 1" from top, bottom, right) (see Appendix IIb [40])
4. Title Block - 5" x 9" in lower right comer (See Appendix IId [41]).

B. Materials

1. Drawing shall be on Mylar type material.
2. Mylar shall be .004 inch thick polyester base and matted on both sides.

C. Drafting

1. Scales
   a) Plan - 1" = 20' except as otherwise specifically approved.
   b) On new construction, where 1" = 30' scale can reduce the number of sheets, it may be used, as approved by the Water/Sewer Engineering Supervisor.
   c) Sections – 1/4 " = 1'-0" or as otherwise appropriate
   d) Profile –Horizontal: 1" = 20' (or match plan)
      Vertical: 1" = 5'
2. Lettering
   a) All text size, style and orientation shall conform to the examples shown in Appendix IIf [42] except the size of the call out for the proposed sewer in the profile only shall be 0.24” and the style and orientation shall be as shown in the sample plans for sewers in Appendix IX [43].
   b) Existing utilities shall be indicated using upper and lower case lettering and shall be slanted. The word existing shall not be used.
   c) Proposed work shall be in bold upper case letters.
   d) The word proposed shall be used in the plan and cross sections to only to call out the proposed water main and proposed sewer. It should not be used with any appurtenances (like manholes, collars or inlets) but the letters calling out the appurtenances should still be bold upper case. See the Sample Plans shown in Appendix IX [44].
   e) Ordinance Date (where applicable [45]) shall be 0.175”.
   f) Preliminary Assessment (where applicable [46]) shall be 0.14”.
   g) Name of sewer system (where applicable [47]) shall be 0.24” Arial.
   h) Title block information shall be as shown in Appendix IId [48].
   i) All streets shall be kept clear of notes as much as possible. The name of the street shall be placed along the top of the sheet. No abbreviations shall be used on the street.
   j) The words street, road, avenue, etc., should be spelled out on streets and abbreviated on intersecting streets.
   k) For Private Cost Contracts, the words "PRIVATE COST" in a 0.24” Arial shall be placed above the title block.

3. Line weights and styles shall be as shown in Appendix IIe [49]
4. Symbols and Abbreviations
   a) Symbols and abbreviations shown in Appendix II [50] shall be used.
   b) Any other symbols and abbreviations shall be defined on the Contract Drawings.
   c) The Legend shown in Appendix IIj [80] shall be shown on all sewer sheets.
5. Drawing Orientation
   a) The drawing should be generally oriented with the street on the sheet being oriented horizontally across the sheet, and north being oriented towards the top of the sheet (the north arrow should point towards the top of the page). In the rare instance that a street is exactly north – south the north arrow should point towards the right.
6. Profiles
   a) All sewer Contract Drawings shall contain a Profile.
   b) Elevations of existing vent pipes are typically not given on return plans. See the picture of a vent pipe in Appendix Vi [51] for the typical elevation relative to the sewer.
7. Cross Sections
   a) All sewer Contract Drawings shall contain a cross section. Drawings shall contain more than one cross section if the underground structures or utilities change substantially such as under a bridge.
   b) Cross sections, on sewer sheets shall be taken looking up stream, except where there is a summit manhole, in which case all sections shall be taken in the same direction.

D. Sewer Base Plan Information

1. City Plan Information
   a) Houseline distance and angles, street and Right-of-way widths, name of street and legislative route number if it is a state highway (see Appendix Vi [52] for a list of state highway route numbers).
   b) City plan elevations shall be shown on all sewer drawings.
      1) If the survey elevations are within 6" of the City Plan data, then it shall be assumed to be at City Plan.
      2) If the survey elevations are different than City Plan data by more than 6", then the existing street elevation shall be shown with a solid line and the City Plan elevations shall be shown with a dashed line.
   c) Survey Benchmark (place in upper left hand comer) – The survey benchmark shall be attained from:

      Jack Betanski, Streets Survey
      jack.betanski@phila.gov 215-685-0585

      There is **no charge** to attain benchmarks because this is a City project. The Surveyor must give the PWD work number for that particular street to the Streets Department District Surveyor when applying for the benchmarks. The closest benchmark to each block should be used.
   d) Street Status - Legally open or not legally open; at grade or not at grade. Only label when not legally open or not at grade (greater than 6" difference from City Plan).

e) Cartway and footway widths shall be dimensioned. Note: The curb is part of the footway and the curbline is at the face of the curb between the footway and cartway.

f) City Plan information shall be shown for at least 30' past the houseline on all streets adjacent to proposed work, including beginning and end locations and intersecting streets.

g) City Plan information, where it deviates from actual existing physical curblines, the City Plan curblines shall be shown dashed and the actual existing physical curblines shall be shown solid.

2. Pertinent Information

a) The Consultant's name or in-house unit shall be shown on the base plan to the left of the title block stipulating who prepared the base plan or design. The base plan and/or design completion date shall be shown directly beneath the Consultant's name. For consultant's projects the drawing shall be stamped by a registered Professional Engineer in the state of Pennsylvania. If only the base plan or design was prepared by the consultant, the wording should reflect such.

b) Base plan legend shall he shown in the upper right hand comer (or lower left hand corner if space is needed) of the base plan whenever possible.

c) {45} {56}The words "AUTHORIZED BY ORDINANCE OF COUNCIL" shall be placed above the title block on base plans when the street has no City sewer and one is being proposed and the existing homes (if any) are not tied into a private sewer which is connected to a City sewer.

d) {46} {57} {104} Except on private cost projects, the words "PRELIMINARY ASSESSMENT" shall be placed at the bottom center of each sheet, on base plans when the street has no sewer and one is being proposed and the existing homes (if any) are not tied into a private sewer which is connected to a City sewer. For assessable projects, drawings shall be sent to the District Surveyor to obtain the preliminary assessment. See Section 6 D.12. [54] and Appendix VIc [55]

1) {3} {4} An Assessable sewer project is one where there is no existing sewer and the project is being funded by the City. A Private Cost sewer project is one where there is no existing sewer and the project is being funded by a developer. For Private Cost Contracts, Developers should refer to the Private Cost Contract Requirements.

2) An Assessment is a charge to the property owner for the installation of a sewer and/or water main. It is based on the length of frontage with deductions for corner properties.

e) {47} Name of the sewer system shall be placed above the title block on all sewer sheets, when appropriate.

1) Example

a) Dobson's Run

b) Wingohocking System

c) Main Relief, etc.

Note: These are large sewers. If the consultant is designing a large sewer, the consultant should ask Design for the name if it is not on the old plans.

f) Miscellaneous information that shall be provided on each plan drawing
   1) Ward number.
   2) Sewer Plat Number
   3) Highway District Number
   4) Streets Survey District Number
   5) One Call Serial Number
   6) Ordinance Date (if applicable [56])
   7) Preliminary Assessment (if applicable [57])
   8) Outfall Number
   9) GPIS Number

g) Title block should always contain the date on which the most recent changes were completed.

h) The title block of each sheet shall indicate the limits of work represented on that particular sheet (in many cases this will not be the entire length of the project) from the street with the lower sewer elevation to the street with the higher sewer elevation.

3. Plan View Information

a) Property owners shall be shown on base plans where there is no existing sewer.

b) District Standard Measurement shall be used for all distances.

c) All block distances shall be indicated on the base plan.

d) All street grades along the gutters shall be indicated. The direction of stormwater flow shall be indicated by placing arrow heads on the curbs pointing in the downgrade direction.

e) All existing sewer manholes including the first manhole on each connecting sewer, shall be identified with field invert and rim elevations. Inside top of crown elevations are required on the base plan for design purposes, to be removed from final plans. Field invert elevations of the main sewer manholes are required in the profile.

f) All elevations shall be identified at the summits and sumps of street. Elevations shall be noted for both the top and bottom of curb.

g) All elevations shall be identified at the street intersections at the P.C., P.I., and P.T. of the curb.

h) Overhead bridges shall be shown and the elevation of the underside of the bridge shall be indicated on the base plan.

i) Match lines shall be shown on base plans when required. See Sample S-3 in Appendix IXc [58].

j) Where there is no existing sewer, the locations and invert elevations of sanitary laterals at the points where the house laterals connect to the septic systems shall be identified on the base plan.

k) All existing laterals over 6 inches in diameter shall be shown dashed on the base plan and indicated with the lateral size and material, where information is available. It is not necessary to show existing inlet pipes since they will be replaced or reconnected with 15”VCP.

l) Existing sewers with a width of 24” or over shall be shown as double line and include a center line for dimensioning. Existing sewers with a width of less than 24” shall be shown as

single line, unless the sewer is brick or is part of a separate system. All existing brick sewers shall be shown as a double line. In a separate system where the stormwater conduit is located directly over the sanitary sewer, the sanitary sewer shall be shown as a single dashed line and the stormwater conduit shall always be shown as a double line.

m) Paving information
   1) Existing footway, curb and roadway material shall be fully identified.
   2) Driveway, tree wells and wheelchair ramps shall be indicated.
   3) Footways, if special pattern (particularly brick), shall be carefully identified.
   4) Deteriorated footway shall be noted.

n) Traffic Information
   1) Direction of traffic along with parking information shall be shown on all streets including intersecting streets. Symbols used shall be as shown on the sample drawings in Appendix IX [59] and in Appendix IIg [60].

o) Above Ground Features
   1) Steps, cellar doors, fire hydrants, parking meters, trees (including diameter), manhole covers, traffic signs and signals, utility poles, and all street furniture (phone booths, mailboxes, benches, etc.) shall be identified as shown in Appendix IIj [61].
   2) All existing water curb stops, sewer vent boxes, and gas curb boxes shall be identified as shown in Appendix IIj [62].
   3) Property lines shall be indicated, along with sufficient street addresses to identify all properties. The address label shall be parallel to the street it is related to. The street name should be added to the address if it is not obvious (like on a parallel street or similar addresses on intersecting streets).
   4) All lots not containing structures shall be so labeled (open lot, parking lot, etc.)

4. Misc. Field Information

a) The final design and specifications are very dependent on the field investigation, and the information obtained from the field visit. The engineers and/or designers which visit the field location should pay special attention to the visible details of the block which may be useful in later making design decisions. Examples of such items are:
   - Condition of paving, signs of paving disruptions due to Water Department infrastructure failures, etc. This information will assist in establishing appropriate paving limits.
   - Evidence of hydrant relocations or damaged or knocked over hydrants. This information will assist in locating new hydrants.
   - Potential construction interferences such as low bridges, tree interference, overhead wires or structures, etc.
   - Condition of homes, are any vacant or collapsing, etc.
   - These are a few examples of the type of information required to properly design a contract.

5. Utility information shall be given as follows:
   a) Each utility shall be identified in the following order: (Water, H.P.F.S., PECO, Sewer, Verizon, Gas, Streets Traffic, SEPTA, Public Property-Communication, Public Property-Transit, Western Union, Cable TV, etc.) See Section 6 [63] [64] and/or Appendix VI [65] for contact information, if required.
   b) Each former utility (i.e. Keystone, City Transit, PTC) if so identified on manholes or the highway supervisor's drawing shall be indicated and identified by its current owner (i.e. Verizon, SEPTA). Each time a former utility is encountered it must be investigated individually. For example do not assume that PTC is SEPTA without confirmation from SEPTA.
   c) Indicate duct bank or pipe size as width x height except **sewer** which **shall be height x width**.
      1) Brick sewers shall be labeled in feet and inches (e.g. 2'-6" x 1'-8")
      2) Manufactured pipe shall be labeled in inches (e.g. 36" RCP or 10”TC)
      3) Box sewers, arch sewers and tunnels not constructed with manufactured pipe, whether brick or poured in place concrete shall be labeled in feet and inches. The above nomenclature, if used consistently, assists in quick identification and approximate dating of the sewer.
   d) The distance from the center line of the utility to the curb line.
   e) Cover for all utilities shall be indicated to the outside top of the conduit. The cover to the top of the sewer is calculated by determining the depth to the invert bottom and subtracting the height and then subtracting the thickness of the crown. Unless the thickness of the crown of a brick sewer is shown on record plans, it shall be assumed to be 9”. This should be done at each manhole. If the cover varies by less than 6”, use the shallower cover. If the cover varies by more than 6”state the cover varies from min. to max.
   f) High voltage electrical conduits shall be separately labeled with voltage, and boxed in.
   g) SEPTA and railroad tracks shall be shown as accurately as possible, but not dimensioned. Their status (active, inactive, paved over) shall be stated. Ties for railroad tracks shall be shown and ties for trolley tracks shall not be shown.
   h) Utility lines shall be drawn using the types of lines shown in Appendix IIe [66].
   i) Existing sewer inlets shall be accurately shown and indicated as to size and type as shown in Appendix Vb [67].
   j) Utilities other than existing water, sewer, and gas shall be shown as double line when their width is 42" or greater.
   k) Existing sewers with a width of 24” or over shall be shown as double line and include a center line for dimensioning. Existing sewers with a width of less than 24” shall be shown as single line, unless the sewer is brick or is part of a separate system. All existing brick sewers shall be shown as a double line. In a separate system where the stormwater conduit is located directly over the sanitary sewer, the sanitary sewer shall be shown as a single dashed line and the stormwater conduit shall always be shown as double line.
   l) All water mains and gas lines 24" or greater in diameter shall be shown as double line.

m) Abandoned utilities, except water mains, shall be labeled abandoned. Abandoned water mains shall not be shown.

6.Profile (Base Plan)

a) Show confirmed curb regulation of the curb closest to existing sewer. Profile shall show both actual and City Plan curb lines if there is a greater than 6" difference between the two. If the difference is 6" or less then show the confirmed City Plan curb lines only.

b) All existing sewers and manholes shall be shown and identified with field invert elevations.

c) Match lines shall be shown where applicable. Match lines are shown in the profile when the matching sheet shows a profile to that point. If the matching sheet does not show a profile to the match line, the profile should be extended past the match line in the plan view to complete the profile of sewer on the matching sheet. No match line is needed in the profile when the profile is extended past the match line in the plan view (See sample sheet S-3 of contract S – 40599 – RD in Appendix IXc [68]).

d) The elevations of bridge footings and the underside of bridges shall be indicated on the profile.

e) SEPTA or railroad track and track status at intersecting street shall be shown (active, inactive, or paved over).

f) Show all utilities which fall within the projected trench line (outside dimensions) or cross the proposed sewer, assuming construction in place.

7. Cross Section (Base Plan)

a) All cross sections shall be shown beneath the profile or on the side of the profile, if possible. Sufficient space shall be left on the sheet to place standard notes.

b) All utilities shall be shown in the entire cartway and both footways to the house lines. Abandoned utilities, except water mains, shall be labeled (abandoned). Abandoned water mains shall not be shown.

c) The cross section shall be taken from the plan looking toward the high end of the existing sewer, except where you have a summit manhole, where all sections shall be taken in the same direction. If no sewer exists, the cross section shall be taken upgrade, based on gutter grades.

d) Where there is a railroad bridge shown on the base plan, a cross section at the railroad bridge with underside elevations shall be shown on the base plan. (This is in addition to the standard cross section for the base plan).

e) The cross section shall be taken at a point where there is the most utility congestion and where there is considerable change that may affect the construction.

f) City Plan information shall be indicated and also physical dimensions where they deviate from City Plan information by more than 6”.

E. Proposed Sewer

1. Plan View (Contract Plans)

a) The proposed sewer shall be located and dimensioned from the center line of the proposed sewer to the nearest curb line.

b) All new manholes shall be identified. Invert elevations at new manholes shall be included at changes in direction, size or grade and at terminating manholes (except when the sewer terminates at a concrete collar).

c) All new inlets and inlet pipe shall be shown and identified. See Appendix Va [69] for Preferred Inlet Locations.

d) All new concrete collars, brick bulkheads, vent pipes and inlet pipes shall be shown and identified.

e) Match lines shall be shown on Contract Plans, where applicable. See Appendix IX [70]

f) Applicable standard notes shall be placed on all sheets of the proposed sewer Contract. (See Appendix IIm [71] to obtain proper notes).

g) All junction chambers, separating chambers and utility manholes shall be identified. All additional information or instructions concerning these structures shall be written in the specifications.

2. Profile (Contract Plans)

a) In the profile the sewer shall be shown at the correct size and grade and identified. The manholes and their elevations, when applicable, shall also be shown and identified.

b) The new sewers that are shown in the profile that are connected into the main sewer shall be identified. The size of the new sewer and the invert elevation at the connection shall be shown at the correct location in the profile.

c) All new concrete collars, concrete cut-off walls and vent pipes along with their invert elevations shall be shown and identified in the profile.

d) All chambers shall be shown in profile. All additional information or instructions concerning these chambers shall be written in the specifications.

e) Match lines shall be shown where applicable. Match lines are shown in the profile when the matching sheet shows a profile to that point. If the matching sheet does not show a profile to the match line, the profile should be extended past the match line in the plan view to complete the profile of sewer on the matching sheet. No match line is needed in the profile when the profile is extended past the match line in the plan view (See sample sheet S-3 of contract S – 40599 – RD in Appendix IXc [72]).

3. Cross Section (Contract Plans)

a) The new sewer shall be shown in the correct location in the cross section looking up-stream. The new sewer shall be dimensioned from the center line to the curb and identified.

b) Where there is a railroad bridge shown on the base plan, a cross section at the railroad bridge with underside elevations showing the new sewer looking up-stream shall be shown. Bridge foundations shall also be shown.

F. Sample Drawings

1. Appendix IX [74] shows sample sewer drawings which demonstrate the final look of the drawings for various types of sewer systems. Take note of the general look and character of the drawings. Also notice the lettering style, line widths and scales. Additionally, see Appendix II [75] for “Drawing Size and Borders (Sewer)”, “Title Block (Sewer Drawing)”, “Symbols and Abbreviations”, “Lettering”, “Line Styles” and “Standard Notes for Sewer Sheets”.

Appendix IX [74] includes the following:

- Combined Sewer Drawing (Plan, Profile & Section)
- Sewer Match Line Drawing
- Separate System Sewer Drawing (Plan, Profile & Section)
- Sewer Green Drawing
- Roadway Grading Plan

Water Technical Design Information

4

A. Requirements for Sizing and Configuration

1. {107} The specific relay size shall be provided by the Planning Unit.
   a) For in-house water only projects the water relay requirements are available in the CIPIT (Capital Improvement Program Integrated Tracking System) pipe estimate screen of scheduled locations.
   b) For consultants designing a water only project, the water main relay requirements will be provided upon receipt of a completed water base plan.
   c) Actual final design location, configuration, and limits shall be based on the Engineer's judgment encompassing all aspects of the design process.
2. For project including sewer, water relay requirements will be provided concurrently with sewer requirements on a completed sewer base plan.
3. **Consultants** should see Section 6 A [77] for the base plan submittal and review procedure.

B. Proposed Water Main Design

1. Location for New Developments
   a) Cartway 36 feet or less - the main shall be located in the center of the street except as stated below in b).
   b) If ordinance specifies footway lay, or, if one side of street is park or other city owned property, a footway location shall be coordinated with Verizon, PECO, Gas etc.
2. Location for Relay
   a) Where cartways are less than 36 feet wide and if a dual main has not been specified, the location of the centerline of the proposed main shall be as follows, in order of decreasing desirability.
      1) Center of street (greater than 3 feet from nearest curb)-nearer the center the better.
      2) Footway - greater than 3 feet from the curb (Distance from proposed water main to buildings should be maximized, if within 6 feet of a building the design should be approved by the Water/Sewer Engineering Supervisor).
      3) Gutter - within 3 feet of curb.
      4) Footway - within 3 feet of curb.

      Generally, the water main trench shall be located away from the curb to avoid increased installation costs as well as increased difficulty in future maintenance.
   b) Where the services on the two sides of the street are extremely unbalanced, as a row of homes opposite a school or factory, a footway location adjacent to the homes may be preferred.
   c) The closest a new 8 inch main can be installed next to an existing 6 inch main is 18 inches center to center, 24 inches is preferred.
   d) Proposed water mains shall be located such that the water main is completely outside a line drawn on a 2 vertical to 1 horizontal slope from the outside trench line of the sewer (existing or proposed) and such that there exists a minimum of 3'-0" between the respective trenches.

If for whatever reason this is not feasible it shall be approved by the Water/Sewer Engineering Supervisor.

e) Where a sewer, for whatever reason, is to be abandoned and is 16" in diameter or greater it shall be filled with flowable fill as specified in the Standard Details and Standard Specifications for Sewers.

f) Where a water main, for whatever reason, is to be abandoned and is 16" in diameter or greater it shall be filled with flowable fill as stated in the Master Specifications.

3. Utility Interference

a) Philadelphia Gas Works

1) The City has an agreement with PGW, which basically states that if the proposed sewer and/or water main places the gas main within a 2 vertical to 1 horizontal influence line, the City will reimburse PGW for up to 50% of the replacement costs. It is therefore in the Water Department's best interests to evaluate our locations for proposed water mains/sewers in context of the potential costs associated with reimbursement to PGW. See Appendix IVg [85] for the Water Department /PGW Agreement.

b) Other Utilities

1) If other utilities have constructed their facilities over our water main or have installed their facility in our proposed location after they have been informed of our plans to relocate in a specific location, then they shall be responsible for either relocating their facility or reaching an agreement with the Water Department where we will relocate our facility and the other utility will pay for any additional costs to the Water Department.

2) Utility presence in the street is by permit of the Streets Department. A highway opening permit must be obtained through the Streets Department's Guaranteed Paving Information System (GPIS) for each location where they install a new facility. This permit, along with the highway opening permit guidelines establishes the terms and conditions under which all utilities are governed in City streets. This permit gives the City and all its Departments certain rights concerning the relocation of non-city utility's facilities, for the benefit of the City. Due to the costs involved in relocating infrastructure, much prudence and engineering judgment must be used in invoking our rights with respect to other utilities. See Appendix IVb [86] for a further explanation and reference samples of the GPIS application.

4. Limits of proposed mains in major streets (cartway 26 feet or wider).

a) Intermediate intersections shall be completely rehabilitated and set up for future relay. Exception is made for intersections with ductile iron (D.I.) or cast iron tyton joint (C.I.T.J.) pipe. (1970 vintage or newer)

b) The end intersections shall be completely rehabilitated if any of the following apply:

1) Concurrent sewer work extends into the intersection.

2) Previous relay of adjacent streets has extended up to or into the intersection.

3) Intersecting street water main is 100 years old or older.

c) If the end intersection is not to be rehabilitated, the tie-in shall be as follows:
   1) If the intersecting main is greater than 6 inches. In general, the limit shall be at the intersecting main.
   2) If the intersecting main is 6 inches, attempt to tie into the existing leg without entering the intersection (i.e. at curbline) or if due to the geometry it is necessary to enter the intersection, still attempt to tie into the existing leg.

5. Limits of proposed mains in secondary streets (cartway less than 26 foot wide).
   a) Intermediate streets shall be rehabilitated. Exception shall be made for intersections with D.I. or C.I.T.J pipe (1970 vintage or newer).
   b) End intersections are not to be rehabilitated unless required:
      1) For concurrent sewer construction.
      2) To finish off intersection from previous relay.
      3) By geometry.
   c) If the end intersection is not to be rehabilitated, follow the instructions under 4c above.
6. Relay size
   a) Except as otherwise specified, minimum relay is 8 inch.
   b) On a dual main relay, one main shall be 6 inches if no fire hydrants are connected, except Center City (Delaware River to Schuylkill River and Vine Street to South Street) locations which shall be 8 inches minimum.
   c) In cul-de-sacs the water main loop beyond the hydrant tee shall be relayed with a 6 inch main.
7. Pipe Material
   a) All mains shall be ductile iron pipe with push-on joints unless otherwise specified by the Water Department.
   b) The class of ductile iron pipe shall be 56 for sizes 6”, 8”, 10”and12”. Class 54 shall be used for sizes 3”, 4”, 16” through 48”.
8. Valves
   a) Size - All water mains shall have valves of the same size as the main unless otherwise noted except 3”mains or service connections shall have 4” valves.
   b) Type – All valves, 12” and smaller, other than tapping valves are Water Department Standard resilient seat mechanical joint gate valves furnished with retainer glands. Valves 16” and greater shall be gate valves or butterfly valves as directed by the Water/Sewer Engineering Supervisor on a case by case basis.
   c) Line Valve Location:
      1) When the main is in the cartway 8 feet or further from the nearest curb, the valve shall be located on the house line. This makes it easy to find when it is snow covered.
      2) When the main is in the cartway less than 8 feet from the nearest curb, the valve shall be located on the curb line so that cars won’t park over it.
      3) When the main is in the footway the valve shall be located on the house line unless conditions make it necessary to be placed closer to the curb line.

d) Fire Hydrant and Service Connection Valve Locations:
   1) Domestic and fire service connection valves shall be located as close to the main as possible.
   2) Fire hydrant valves shall be connected directly to a hydrant anchoring tee if possible.

e) Appurtenances:
   1) All valves shall be supplied with Water Department 7 inch plastic or cast iron valve boxes.

9. Fire Hydrants
   a) Type - all fire hydrants shall be Water Department Standard with mechanical joint inlets furnished with retainer gland.
   b) All existing hydrants that are affected by the proposed water main relay, regardless of type or age, shall be replaced with hydrants with center compression locks.
   c) Maximum spacing between hydrants:
      1) Residential areas - 600 feet measured along the curb line.
      2) Commercial/Industrial areas - 500 feet measured along the curb line.
      3) The placement of hydrants in the middle of the block shall be avoided, unless the maximum spacing requirements cannot be met.
      4) The existence of high pressure fire service hydrants shall not affect the above spacing.
   d) Color Coding
      1) All hydrants shall be color coded by having their bonnets painted in accordance with the following, based on water main size:
         a) 6"-8" Orange
         b) 10"-12" Green
         c) 16"- Larger Red
   e) Location:
      1) All hydrants except those used for blow-off and/or for dewatering purposes shall be 18 inches from curb, located near intersections and connected to the main near but behind the line valve (away from the intersection). This will prevent a hydrant from being out of service if the intersection is shut down.
      2) Where possible, hydrants shall face streets at least 26 feet wide.
      3) Where possible, hydrants shall face the wider street at a particular intersection.
      4) If there are multiple acceptable locations for a fire hydrant at an intersection based on the above criteria, then consideration should be given to:
         a) Choosing a location which due to the existing traffic patterns will minimize the risk of an automobile knocking the hydrant down in the future.
         b) Choosing a location which based on the parking patterns on the intersecting streets will maximize parking spaces in that immediate area.
      5) On water relay, as well as new construction, the placement of hydrants in the middle of the block shall be avoided, provided all other requirements are met.
      6) All water mains with dead ends shall have a fire hydrant placed at the end of the line for flushing purposes. Consideration shall be made for the disposal of flushed water.

f) Hydrant Anchoring Tee:
   1) Whenever possible a hydrant anchoring tee rather than a mechanical joint tee should be used for the hydrant leg.

g) Valving:
   1) All fire hydrant legs shall have a 6 inch valve located as close to the main as possible. The hydrant valve, wherever possible shall be placed onto a hydrant anchoring tee.

h) Water mains in relation to fire hydrants:
   1) Fire hydrants used for fire protection shall not be connected to mains less than 8 inches in diameter.
   2) For water mains laid in the footway, a minimum distance of 5 feet from the curb for 8 inch mains is required for a straight hydrant connection (5'-3" for 12 inch mains).
   3) For water mains laid in the cartway, a minimum distance of 3 feet from the curb is required for a straight hydrant connection.

i) {102} Fire Department review of fire hydrant locations:
   1) Any Contract which contains water main relay work shall be sent to the Fire Department for review, see Section 6 D.4.a [116]. A print shall be made and marked up showing which hydrants are being added and which hydrants are being removed. All hydrants to be removed and not replaced at that location shall be circled in red. All hydrants to remain shall be circled in orange. All new hydrants in new locations shall be circled in blue. All direct removal and replacements of hydrants shall be circled in brown, as shown on the Legend for Fire Department Review of Fire Hydrant Elimination in Appendix IVa [87]. All drawings shall have a legend denoting the system of marking used attached to the print.

10. Water Main Depth

a) Cover
   1) Mains 12 inches and under are normally installed at 4 foot cover.
   2) Mains 16 inches and over, minimum cover shall be as defined in the Water Main Standard Details. Contact the Water/Sewer Engineering Supervisor for specific direction.
   3) Less than 4'-0" cover shall only be used when absolutely necessary. Contact the Water/Sewer Engineering Supervisor prior to using a cover less than 3’- 6”.

b) Crossing Sewer
   1) The vertical distance between water main and sanitary sewer shall be a minimum of 18 inches.

c) Gas Mains
   1) The proposed water main trench shall be completely outside a line drawn on a 2 vertical to 1 horizontal slope from the outside edge of the gas main trench, unless this is not feasible.
   2) 12" vertical clearance is required between the pipes.
   3) If these guidelines are violated, PGW will replace their gas main in the affected area. This work shall fall under the PGW agreement. See Appendix IVg [88].

d) Existing Water Main

1) The existing water main that is to be abandoned at the completion of the relay shall remain in service during the work, except intersections beyond the line valves. In cases of possible conflict, bends or offsets shall be used to bend around the existing water main.

2) If the existing water main to be abandoned is 16" or greater it should be filled with flowable fill.

e) Railroads

1) Prior to designing the railroad crossing the designer shall establish the present status of the tracks (i.e. active, inactive, primary, secondary or abandoned). This parameter shall affect the method of design of the crossing.

2) Pipelines crossing active tracks may require a casing pipe. When a casing pipe is required it shall be installed at 5'-6" cover and shall be provided with casing insulators. Casing pipe installed by jacking and boring will be steel and by open cut, ductile iron. Casing pipe shall be sized as follows:

Water Main	Casing Pipe
8”	16”
12”	20”
16”	24”

3) For more information consult the Pipeline Occupancy Specifications on the web site of the specific railroad (Conrail, Amtrak, CSX, Norfolk Southern, SEPTA). For further information Railroad contacts are listed in Section 6.

4) Contract drawings shall contain a section and profile of the water main and casing pipe at the railroad crossing showing the casing pipe details.

5) Consultants shall submit their design directly to the railroads. See Sect. 6 D.9. [101]

11. Service Connections

a) A service list of all properties to be reconnected shall be attained from the PWD Intranet for In-House projects. Consultants shall request the service list from the Design Branch front office staff.

1) The request shall include the hundred-block of each street and shall be sent to:

Philadelphia Water Department-Design Branch Front Office
Linda Jones
Linda.Jones@phila.gov

This service list shall be included at the end of the Contract Specifications.

b) All services other than those with D (discontinuance) permits and those to empty lots shall be replaced.

c) Supply lines which have current accounts shall be replaced and reconnected.

d) Supply lines for unoccupied Non-Billed Accounts (NB-9 accounts), shall be replaced including a new curb stop. The new curb stop shall not be reconnected to the existing service pipe. The new curb stop shall be left in the "off' position and the house side of the curb stop shall be capped or plugged.

e) The supply line to an NB-9 property which is found to be occupied shall be replaced. The new curb stop shall be reconnected to the existing service piping. Customer Service shall be notified whenever this condition is observed.
f) No lot, unless it is a current account, shall receive a new supply line.
g) Depth of proposed service piping:
    1) All service piping shall be placed at 4' cover including the proposed curb stop.
    2) If the existing curb stop is at a different elevation than the proposed curb stop, the proposed curb stop shall be placed at 4' cover and the necessary adjustment shall be made on the distributing pipe between the proposed curb stop and the house.
h) Ferrule type services (2-1/2 inches and smaller) shall be replaced with K copper unless polyethylene is specified by the corrosion control consultant. Such services shall be installed with one continuous length of copper service pipe between the ferrule at the main and the curb stop.
i) Ferrule type services are replaced on an equal size basis except the minimum is 3/4 inch and 1- 1/4 inch is replaced by 1-1/2 inch
j) Ferule type services shall be replaced from the main up to and including the curb stop.
    1) Main in Footway - curb stops for adjacent properties shall be on the house side of the main within 4 feet of the main. When polyethylene is used there may be exceptions. Please verify current policy.
    2) Main in cartway or opposite footway - curb stop shall be 18 inches from the curb line in the footway.
k) Valve type services (3 inches and larger) shall be replaced with ductile iron pipe except where an isolation joint is required by the corrosion control plan.
l) Valves for valve type services are placed as close as possible to the water main.
m) Valve type services are replaced size for size except that 3 inch services are replaced with a 4 inch tee branch and a 4 inch valve followed by a 4 x 3 reducer.
n) Valve type services for mains in the cartway and opposite footway shall be replaced to the curb. For mains in the footway, valves for adjacent properties shall be on the property side of the main and the connection of the new pipe to the existing service shall be as close as possible to the new valve.

12. Fittings
    a) All fittings 12 inch and under shall be 350 psi compact ductile iron mechanical joint.
    b) All fittings 16 inch and over shall be ductile iron mechanical joint (350 psi 24 inch and under).
    c) The openings on all fittings shall be mechanical joint bells.
    d) Vertical Offsets
        1) Vertical offsets 1'-0" or less shall be done by pipe deflection where possible.
        2) Where bends are required for vertical offsets bends (1/32 and 1/16) are preferred as they reduce the size of necessary thrust blocks.
    e) Horizontal bends except as otherwise necessary shall be 1/8 (45º) bends.

f) Where possible, a pair of rotated bends is preferable to separate horizontal and vertical bends. For example when rotating a 1/8 bend halfway, it appears as a 1/16 bend in plan and a 1/16 bend if there were a profile view. More Information is included in the America Ductile Iron Pipe handbook on page 17-26.

g) All thrust fittings, bends, branch of tees, offsets, caps and plugs, and sleeves shall be provided with ductile iron retainer glands. In addition, when the distance of any existing fitting to a thrust fitting is less than 10 feet, it shall also have miscellaneous iron and steel harnessing as detailed in the Standard Details for Water Mains.

h) When a push-on joint is within 10 feet of a thrust fitting, fire hydrant, valve or sleeve, the push-on joint shall be harnessed with miscellaneous iron and steel as detailed in the Standard Details for Water Mains.

i) All thrust fittings and fire hydrants shall receive concrete thrust blocks.

C. Quantities for Water

1. Bill(s) of Materials shall be provided on each drawing indicating all fire hydrants, valves and valve boxes and fittings shown on that sheet.
   a) The order of the Bill of Materials shall be as follows:
      - Fire Hydrants
      - Valves (descending size)
      - Crosses
      - Tees
      - Bends
      - Offsets
      - Reducers
      - Sleeves
      - Caps
      - Plugs
   b) The Engineer shall calculate the tonnage of ductile iron fittings to be used on each project to be incorporated into the specifications. See Appendix VII [76] for a list of weights for ductile iron fittings.
2. Pipe Totals
   a) The total of each pipe size (rounded to next highest 5 feet) shall be shown on each sheet under the heading Pipe Totals (This Sheet). On multi-sheet contracts, the total for all sheets shall be separately shown on Sheet 1 as follows:
      - "Pipe Totals (This Sheet)"
      - "Pipe Totals (All Sheets)"
3. Services
   a) The length of service pipe for ferrule type services for mains in the cartway or opposite footway shall be the distance from the main to the curb plus 5.5 feet. This allows for both the 4' expansion loop and the 18 inch distance from the curb to the curb box.
   b) For mains in the adjacent footway a total service pipe length of 7 feet shall be used.

c) When polyethylene service pipe is used there may be exceptions. Please verify current policy.

4. Excavation
   a) Quantities shall be computed in accordance with the current edition of the Water Main Standard Details & Corrosion Control Specifications, except as necessary to increase quantities for deeper installations or prior roadway stripping by others.
5. Paving
   a) Repaving quantities in asphalt surfaced streets shall be calculated using the current Water Main Standard Details & Corrosion Control Specifications.
   b) Repaving quantities in concrete surfaced streets, concrete driveways and footways shall be based on replacement to the existing joints or a saw cut depending on the wording of the specifications and the paving requirements.
   c) Brick and slate footways are replaced in kind.
   d) Binder quantities, when not specified by Streets Department, shall be based on a 1.5 inch minimum thickness weighing 100 pounds per square yard per inch thick, and specified in tons.
   e) Backfill in State Highways shall be (2RC) from 6 inches above the main to the surface bottom of the concrete base. (2RC) is specified in tons (use 100 pound/cubic foot).
   f) Concrete base in State Highways shall be 10 inches thick high-early strength concrete.
   g) Concrete base in City Streets shall be 8 inches thick.
   h) Repaving quantities in City and State Highways are specified separately.
   i) Whenever a curb requires removal, the footway will require replacement to at least the first joint and the cartway shall be reconstructed for at least 2 feet from curb.
   j) When the proposed main is located in a City Street so that the outside of the trench is within 3 feet or less from curb, the repaving shall extend from cutback line on one side, to the curb on the other. In addition the curb and one block of footway shall be evaluated for potential replacement.
   k) When the proposed main is located in a State Highway so that the outside of the trench is within 4 feet or less from curb, the repaving shall extend from cutback on one side, to the curb on the other. In addition the curb and one block of footway shall be evaluated for potential replacement.
   l) When the proposed water main is located in an intersection of a State Highway and a City Street, the State Highway paving requirements shall extend up to the projected curb lines of the State Highway where the City Street paving requirements shall begin.
   Such shall be noted in the specifications. The paving quantities shall reflect this.
   m) If the Streets Department paving requirements request additional paving to be added to the contract and will be paid for by the Streets Department, those quantities should be separated and placed in the proposal of the specifications as a separate section of P-items and an X should be added to the suffix of the work number. In addition, the front office staff of the Design Branch shall be notified at 215-685-6280, in order to update the log book and the computer database.

n) Where full width street restoration is required, a full width 6” stone sub-base shall be required. This will be a separate payment item.

6. Curb
   a) When the proposed main is located so that the outside of the trench is within 3 feet of the curb on City Streets or 4 feet on State Highways, evaluation of the curb and footway to the first joint shall be performed.
   b) Full width street reconstruction usually requires curb replacement which in turn requires the replacement of at least one paving block of footway.
7. Quantity Tabulation
   a) See Appendix III for Water Quantity Sheet[89]. Direct links to the Water Quantity Sheet file.

Sewer Technical Design Information

5

A. Hydraulic Study

1. {106} The Planning Unit will provide information which shall be used for hydraulic sizing. Actual final design location, configuration, and limits shall be based on the Engineer's judgment encompassing all aspects of the design process.
2. For projects including water, water relay requirements will be provided concurrently with sewer requirements on a completed sewer base plan.
3. **Consultants** should see Section 6 A [119] for the base plan submittal and review procedure.

B. Proposed Sewer and Stormwater Conduit Design (General)

1. {105} Definition

   a) Sewers carry sanitary flow. They could carry some stormwater also but they must carry some sanitary flow. Stormwater Conduits are not designed to carry sanitary flow. They only carry stormwater. That being said, Stormwater Conduits are often referred to as Stormwater Sewers or just Sewers for ease of discussion. This Manual is no exception. For example: Size of Sewer in B.2. below also refers to Size of Stormwater Conduits.

2. Size of Sewer
   a) Size of proposed sewers is typically calculated by the Planning Unit, however, it may be changed if grades are adjusted.
   b) Size of proposed sewers is based on quantity of flow, grade and velocity.
   c) For comparative pipe data see Appendix VIII [78] "Velocities & Flow Capacities of Pipe Sewers".
3. Velocity Restrictions
   a) Minimum velocity to insure a self cleaning sewer is 3 ft/sec.
   b) Maximum velocity to insure no abrasion of the invert is 15 ft/sec.
   c) In certain areas of the City, where rock excavation or naturally steep grades make maintaining a velocity of 15 ft/sec costly and prohibitive, higher velocities may be used. Prior to designing a sewer with a velocity higher than 15 ft/sec, the situation shall be discussed with the PWD's Water/Sewer Engineering Supervisor. If the flow velocity is greater than 15ft/sec, Class V, Wall C RCP pipe shall be used/considered instead of Class III, Wall B RCP. The Class V, Wall C pipe is made with higher strength concrete and is approximately ¾ inch thicker and will lengthen the life of the pipe in these conditions. The Water/Sewer Engineering Supervisor should be consulted in these situations.
4. Sewer Materials
   a) In separate systems the sanitary sewer is made of vitrified clay and the stormwater sewer is made of reinforced concrete pipe.
   b) In combined systems the sewer is made of reinforced concrete pipe.
   c) For large sewers (above 84" in diameter), cast in place reinforced concrete box sewers may be required.

d) For sewers with velocities above 20 ft/sec a special liner or other special precaution may be required. Class V, Wall C RCP may be an option, please contact the Water/Sewer Engineering Supervisor for guidance.

e) For further information on sewer materials consult the Standard Details and Specifications for Sewers.

5. Minimum Grades

a) In spite of minimum velocity requirements, a minimum grade of 0.5ft/100ft. (0.5%) is recommended.

6. Location

a) On sewer reconstruction projects the sewer is typically reconstructed in the same location as the existing sewer.

b) Sewer elevations may vary from existing conditions depending on the existing and future conditions of the upper and lower end and on minimum and maximum velocities. Consideration should also be given to the depth of laterals,

c) Connection to intersecting sewer shall be as follows:

1) Where practicable sewers shall match spring lines. (Spring line is the centerline of a circular sewer or the line that bisects an egg shaped sewer at a point 2/3 the height above the invert.)

2) If not practicable sewers may match inverts.

d) At all times proposed sewers shall be placed so as to receive all existing laterals.

e) Proposed sewers and water mains shall be located such that the water main is completely outside a line drawn on a 2 vertical to 1 horizontal slope from the outside trench line of the sewer, or there exists a minimum of 3'-0"' clearance between the sewer and water main trench, whichever is greater. In rare cases due to excessive utilities, a water main may be approved to be placed in close proximity to the sewer, but this must be approved by the Water/Sewer Engineering Supervisor.

f) Where a sewer, for whatever reason, is to be abandoned and is 16" in diameter or greater it shall be filled with flowable fill in accordance with the Standard Details and Standard Specifications for Sewers.

g) On new sewer construction, the sewer shall be located so as to minimize lateral length, however at all times it shall be located in the cartway, or Philadelphia Water Department Right of Way where no cartway is present. 8'- 0" from the curb with the most properties is the preferred location. This is because at 8'- 0" cars will not park over the manhole.

h) For new sewer construction, proposed sewers shall be placed at a depth to insure proper drainage of the lowest portion of each property and/or structure in the development.

7. Utility Interference

a) Philadelphia Gas Works

1) The City has an agreement with PGW, which basically states that if the proposed sewer and/or water main places the gas main within a 2 vertical to 1 horizontal influence line, PGW will replace the gas main, and the City will reimburse PGW for up to 50% of the replacement cost for the gas main. It is therefore in the Water

Department's best interests to evaluate our locations for proposed water mains/sewers in context of the potential costs associated with reimbursement to PGW. See Appendix IVg for the Water Department/PGW Agreement [90].

b) Other Utilities
    1) If other utilities have constructed their facilities over our sewer then they shall be responsible for either relocating their facility or reaching an agreement with the Water Department where we will relocate our facility and the other utility will pay for any additional costs to the Water Department.
    2) Utility presence in the street is by permit of the Streets Department. A highway opening permit must be obtained through the Streets Department's Guaranteed Paving Information System (GPIS) for each location where they install a new facility. This permit, along with the highway opening permit guidelines establishes the terms and conditions under which all utilities are governed in City streets. This permit gives the City and all its Departments certain rights concerning the relocation of non-city utility's facilities, for the benefit of the City. Due to the costs involved in relocating infrastructure, much prudence and engineering judgment must be used in invoking our rights with respect to other utilities. See Appendix IVb [91] for a further explanation and reference samples of the GPIS application.

8. Foundation and Substructure Conditions
    a) For new construction, a complete soil investigation shall be performed with borings taken at least once for every 150 feet of sewer.
        1) In cases where the standard penetration resistance value (or N-value) is consistently 17 blows per foot or greater pile supports are not required by the Water Department. Where soil conditions are poor, the sewer along with the laterals, inlet pipes, inlets and manholes will be required to be placed on piles.
        2) In areas of moderately poor soils, other means of support may be required. Each case shall be evaluated on an individual basis.
    b) Where sewers are to be reconstructed and where poor soil is suspected, similar precautions shall be taken.
    c) Where borings are required, a plan showing the location of the proposed borings along with a memo requesting the borings shall be sent to the PWD Design Branch.
    d) Where a ground water level is determined to exist within the proposed sewer excavation, special precautions shall be specified, such as:
        1) Well points to draw down the water level in the area of the sewer construction.
        2) Underdrainage system to drain water away from the construction area.
    e) All sewers shall be installed on a concrete cradle as defined in the Water Department Standards, as a minimum. When the soil investigation information requires further support, special foundations shall be used, such as spread footings, piles and pile caps, etc.

9. Sheathing & Shoring
    a) Sheathing and shoring using steel soldier beams shall be included in the contract, where the sewer trench is 18' deep or greater, or where, based on good engineering judgment and practice such is warranted. Items to evaluate are:
        - Depth of proposed sewer
        - Type of soil
        - Proximity to other major/minor utilities
        - Proximity to structures
        - Condition & Foundation type of adjacent structures
    b) The Sheathing & Shoring is typically designed by the contractor and submitted for approval to the Water Department.

C. Vent Design (Sanitary and Combined Sewer Systems)

1. Size and Materials
    a) Vents shall be 12" vitrified clay pipe for combined sewers and 8” vitrified clay for separate system sanitary sewers. Stormwater conduits have no vents because they have vented manhole covers.
2. Configuration
    a) Vents shall be installed such that they are self draining in case water were to enter them, via infiltration or overflow.
    b) Vents shall be installed such that they will not act as an overflow until the water level is at least as high as the inside top of crown of the higher sewer.
3. Location
    a) Existing vents may be reconnected where engineering judgment deems it acceptable. Engineering judgment shall include but not be limited to:
        - Age and probable condition of vent
        - Proximity of existing vent to street disruption of proposed sewer construction
        - Length, Cost, and difficulty of replacing existing vent pipe.
    b) Where a new vent is to be installed at the upper end of a combined sewer, it shall vent to an adjacent sewer. Whenever possible, vents shall be installed from the upper end manhole to a manhole on the adjacent sewer. If there is no convenient manhole on the adjacent sewer then the vent shall be connected directly to the adjacent sewer.
    c) If there is no sewer to vent to, or if the sewer is too far away, ask the Water/Sewer Engineering Supervisor for direction to possibly not install a vent. On a separate system, if there is no sewer to vent to, vent the sanitary sewer to the Summit Manhole.

4.Vent Installation
    a) New vent installation locations may deviate from the existing. In this case it will be necessary to excavate at the connection of the existing vent to the existing adjacent sewer and seal the vent opening in the existing adjacent sewer.

5. Cover
    a) The ideal minimum cover for a vent is 6’- 0” so that other utilities can cross easily. However, this is left to the engineer’s judgment.

D. House Lateral Design

1. Size and Materials
    a) In separate systems the stormwater lateral is typically 6" vitrified clay pipe (VCP) and the sanitary lateral is typically 5" VCP.
    b) In combined systems the lateral is typically 6" VCP.
    c) In certain areas where poor soils are present, ductile iron laterals may be required. (If used, a corrosion control engineering study may be required).
2. Grade and Depths
    a) House lateral traps shall be 7' deep to the invert, wherever possible.
    b) House laterals shall maintain a minimum slope of 2%.
    c) If lateral grades exceed a 1 to 1 slope, a riser shall be used as detailed in the Standard Details and Standard Specifications for Sewers.
    d) Typically house laterals are placed in an open cut trench without concrete cradle. They should have a Class D bedding and be installed in accordance with ASTM C 12.
    e) When soil conditions warrant, special foundation should be used, such as cradles or piles.
3. Plumbing Convention
    a) Laterals shall be installed and shown such that the sanitary lateral is located downstream of the stormwater lateral in relation to the flow of the main sewer.
4. Connection to Sewer
    a) House laterals shall be connected to the sewer by wye branches or saddle connections as per the Standard Details and Standard Specifications for Sewers
    b) Typically in a sewer reconstruction project, the house laterals are not replaced, but are reconnected to the new sewer, within the sewer trench.
    c) Where lateral reconstruction occurs outside the sewer trench the proposed lateral work should be shown on the cross section or otherwise detailed.
    d) When the sewer is within 5 feet of curb, all house laterals on the short side of the street shall be replaced up to and including the house trap and vent. The new house laterals shall be vitrified clay pipe, and the house trap and vent shall be cast iron pipe.
5. Streets 16 feet wide or less
    a) When streets are 16 feet or less in width, all house laterals on both sides of the street shall be replaced up to and including the house trap and vent. The new house laterals shall be vitrified clay pipe, and the house trap and vent shall be cast iron pipe.

E. Inlets

1. Size and Materials
    a) Typically, inlets shall be 4 feet, except where large and fast flows are expected, where a 6’ inlet or 4' vane grate may be required.

2. Inlet Replacement Policy
   a) Replace all No. 1, No. 2, No. 3, or No. 4 inlets. Inlet pipe diameter for existing No. 3 and No. 4 inlets is 12" and 8" respectively, and therefore, shall be reconstructed with 15" diameter VCP.
   b) Replace all inlets in poor condition. Check with the Superintendent of Sewer Maintenance at 215-685-2034.
   c) Replace all grate inlets with open mouth grate inlets if possible.
   d) All inlets which are not required to be replaced by the above criteria and do not appear to be in obvious poor condition from field observations, shall be examined by Sewer Maintenance. A plan showing the inlets to be examined along with a cover letter/memo requesting the examination shall be sent to:

      1) Philadelphia Water Department-Collector Systems
         ARA Tower, 4th Floor
         1101 Market Street
         Philadelphia PA 19107
         ATTN.: Benjamin Jewell, Collector Systems 215-685-6203
         Enclosure: 1 set

      THE ABOVE REQUEST SHOULD BE DONE EARLY IN THE DESIGN PROCESS.

   e) If the inlet pipe is 15" in diameter and in good condition, reconstruction of the inlet pipe will not be necessary.
   f) Preference of Inlet Types:
      1) Open mouth grate inlet (preferred).
      2) City inlet (where open mouth grate is not possible).
      3) Open Mouth Inlet (where open mouth grate is not possible).
      4) Highway Grate inlet (where curb is depressed).
   g) Size of open mouth grate, open mouth, city, and modified grate inlets:
      1) 4 foot for street grades of 3.5% or less.
      2) 6 foot or 4' vane grate for street grades over 3.5%.
   h) See Appendix Va [83] for sketch of preferred inlet locations. Although the PWD has preferences for inlet type and placement, there may be other factors that could dictate the actual inlet selection and placement. Some of these factors may include the following: ADA ramps, curb bumpouts, street furniture, utility lines, castings, hydrants, street drainage, etc. Should there be questions about what would be acceptable in these situations you may contact the Water/Sewer Engineering Supervisor for guidance
   i) Gutter flow should not flow past ADA curb ramps. This may mean eliminating a radius inlet and installing 2 inlets at the Points of Curvature. Appendix IVc [84] provides some general guidance on ADA curb ramp design. Should there be questions about what would be acceptable, you may contact the Water/Sewer Engineering Supervisor for guidance.

3. Inlet Materials
   a) Inlets shall be precast reinforced concrete conforming to the Standard Details and Standard Specifications for Sewers and the Quality Assurance Program, except as may be required at special locations.
   b) Where utility conflicts warrant, custom sized catch basins constructed of pre-cast concrete or cast-in-place concrete shall be detailed and specified.
   c) All pertinent castings shall also conform to the above standards.
4. Inlet Installation
   a) Inlets shall be installed in accordance with the Standard Details and Standard Specifications for Sewers.
   b) For poor soil areas, special foundation requirements shall be provided, similar to that used on the sewer.
5. Inlet Pipes
   a) Inlet pipes shall be 15" VCP
   b) If inlet pipe grades exceed a 1 to 1 slope, a riser shall be used as detailed in the Standard Details and Specifications for Sewers.
   c) Inlet pipes shall be connected to the sewer by wye branches as per Standard Details and Standard Specifications for Sewers
   d) Any deviations from this policy will require prior approval by the Water/Sewer Engineering Supervisor.

F. Manholes

1. Size
   a) Manhole risers typically are 4 foot in diameter.
   b) 6 foot diameter manhole risers may be used where special conditions warrant.
2. Materials
   a) Manholes and all their components shall conform to the Standard Details and Standard Specifications for Sewers and the Quality Assurance Program.
3. Location
   a) Manholes shall be located at all locations of change of direction, grade or size of sewer.
   b) Manholes shall also be placed so as to maintain a maximum distance between manholes of 300 feet for sewers 48" in diameter and under and 400 feet for sewers 54" and over in diameter.
4. Type
   a) Whenever the upstream sewer invert elevation coming in to a manhole is less than 2 feet higher than the downstream sewer invert elevation of the sewer leaving the manhole, a) standard manhole may be used.
   b) If the difference between the sewer invert elevation coming in to a manhole and the outlet sewer invert elevation leaving the manhole is greater than 2 feet, a drop manhole shall be used for sanitary sewers, a wellhole shall be used for stormwater and combined sewers.

5. Manholes on Separate Systems
    a) Where sanitary manholes are required on a separate system, the stormwater sewer will require a turn out to avoid the sanitary manhole.
    b) The stormwater sewer shall require a manhole upstream of the turnout.
6. Drop Manholes
    a) Wherever drop manholes are required they shall be designed in accordance with the Water Department's Standard Details and Standard Specifications for Sewers and the Quality Assurance Program.
    b) The vertical pipe sewer shall be located on the exterior of the manhole and encased in concrete. In certain instances the vertical pipe sewer may be located inside the drop manhole. In such cases a 6' diameter manhole shall be used. This situation shall be detailed on the drawings. The 6' interior drop manhole shall be considered in depths exceeding 18'.
    c) The manhole shall also have a cleanout for accessing the sanitary sewer.
    d) All sewers upstream of a drop manhole shall have a manhole within 25' of the drop for maintenance purposes.
7. Wellholes
    a) Wellholes shall be in accordance with the Water Department's Standard Details and Specifications and the Quality Assurance Program.
    b) Wellholes shall contain drip slabs to dissipate the energy of the storm flow between each wellhole riser section between the two pipes.
    c) Where the flow is large, the velocity great, or the vertical drop large, granite block invert and drip slabs or special abrasive resistant concrete may be required.
    d) All sewers both upstream and downstream of a wellhole shall have manholes for maintenance purposes, as wellholes are not man accessible. The upstream and downstream manholes shall be located within 25' of the wellhole where practicable.
8. Manhole or Wellhole structures below water table
    a) Manholes placed below the water table or sanitary manholes with inverts below 0.00 city datum, shall use an approved water tight gasket material around all openings into them to prevent infiltration. The Water/Sewer Engineering Supervisor shall be consulted for the specifications.

G. Box Sewer and Box Stormwater Conduit Design (see Section 5 B.1 for definition [105])

1. Design Criteria
    a) Designed and constructed in accordance with the recommendations of ACI 350 Concrete Sanitary Engineering Structures.
    b) Design loading shall consist of a minimum H-20 loading at the street surface in addition to all other dead loads. If actual loading is greater, then use the larger loading condition. However, a minimum of 1200 psf shall be used.
    c) Minimum wall thickness shall be 12 inches.
    d) Minimum roof slab thickness shall be 12 inches.
    e) Minimum base slab thickness shall 15 inches.
    f) Minimum reinforcing bar size shall be #4.

g) Since box sewers are typically formed on the interior only and the exterior face of the walls are poured against the trench sheathing, an additional 3" of cover should be added to the exterior face of the box sewer. This will allow for any variations in the sheathing. This additional 3" cover should not be included in the design, and is in addition to the minimum wall thickness in the previous paragraph.

2. Materials
   a) Concrete shall be ready-mixed and shall be batched, mixed, and transported in accordance with ASTM C94 - Standard Specification for Ready Mixed Concrete. Concrete shall have a 28 day compressive strength of 4000 psi and be air-entrained.
   b) Reinforcing steel shall consist of deformed steel bars that are rolled from new billet-steel and shall conform to ASTM A 615 – Standard Specification for Deformed and Plain Billet-Steel Bars for Concrete Reinforcement. The bars shall be tested in accordance with ASTM A 370 - Standard Methods and Definitions for Mechanical Testing of Steel Products. All reinforcing steel shall be Grade 60.
   c) Rubber dumbbell type waterstops and vitrified clay liner plates shall be in accordance with specifications outlined in the Standard Details and Standard Specifications for Sewers.
3. Inverts
   a) The invert of rectangular reinforced concrete combined or sanitary sewers shall be constructed with a 156° vee shape at 12° off the horizontal. Rectangular reinforced concrete stormwater conduits shall be constructed with flat inverts.
   b) For velocities over 12 feet per second, vitrified clay liner plates, stone block, redressed blocks or other means of abrasion control shall be used for the invert.
4. Construction Joints
   a) Transverse and longitudinal construction joints shall have a keyway 2 inches deep and 4 inches wide and a rubber dumbbell type waterstop.
   b) Transverse construction joints shall be constructed at the end of each section at a distance not to exceed 50 feet.
5. Connections and Transitions
   a) Transitions from existing sewers to box sewers of different sizes, or between two sections of different size box sewers, shall be done with flare sections.
   b) Flare sections shall not be counted in the quantity of linear feet of box sewer. They shall be separated for lump sum payment per each flare section.
   c) Connections between the existing sewers and the proposed box sewer shall be detailed.

H. Trunk Sewers

1. Trunk sewers are large combined flow sewers servicing large areas of the city which drain both sanitary and storm flow from smaller combined flow sewers servicing smaller areas of the city.
   a) Typically Trunk Sewers flow toward the rivers and creeks, thereby toward the Intercepting Sewers.
   b) Dry weather flow of the Trunk Sewers is diverted to the Intercepting Sewers via Intercepting Chambers and Dry Weather Outlet (DWO) pipes.

c) During periods of wet weather, the intercepting chamber captures the first flush. When the volume of flow in the Trunk Sewer exceeds the capacity of the Intercepting Chamber's diversion structure the diluted excess flow goes to the river. This is known as a Combined Sewer Overflow (CSO).

I. Intercepting Sewers

1. Intercepting Sewers (Interceptors) are the main sanitary sewers which service large areas of the city and carry the sanitary flow to the wastewater treatment facilities. These sewers have limited number of connections.
    a) Connections usually consist of other sanitary sewers or combined sewers (via Dry Weather Outlet pipes) which service smaller portions of the city.
    b) Lateral connections are typically not permitted into the Intercepting Sewers.
    c) All connections into intercepting sewers must be specifically approved and connection details must be approved to insure integrity of the Intercepting Sewer System.
    d) Intercepting Sewers are typically located along creeks and rivers as these are the naturally occurring low areas of the city.
    e) Special precautions should be taken to limit any infiltration and/or exfiltration from the intercepting Sewer System.

J. Quantities for Sewer Work

1. Excavation
    a) Excavation shall be calculated in cubic yards based on a payment width equal to the width of the standard concrete cradle width for pipe sewers and the outside faces of box sewers. See Standard Details and Specifications for Sewers.
    b) The interior volume of the existing sewers is not included in the quantity for excavation.
    c) The excavation quantity for inlet pipes, vent pipes, house laterals beyond sewer trench, etc., shall be calculated and included in the quantity for excavation.
    d) For excavations less than 18' deep and where other reasons do not warrant the use of steel soldier beams or where good engineering judgment does not require steel soldier beams, timber sheathing and shoring without steel soldier beams is to be used. The sheathing and shoring shall not be included in the quantity for excavation, but rather paid for in a separate quantity of Sheathing and Shoring left in place at the fixed unit price specified. The estimated amount of sheathing and shoring shall be calculated and specified in the proposal. The formulas for calculating the quantity of sheathing and shoring left in place are as follows:

Estimated Quantity of Sheathing & Shoring Left in Place

BM = Board Measure = Board Foot = 1 square foot by 1 inch thick.

For example, a board one square ft. by 2 inches thick would be 2 Board Feet = 2 BM.

$$MBM = Thousand\ board\ feet = \frac{Length * Depth * Thickness * Constant}{1000}$$

Length = Length of Trench (in feet)
Depth = Depth of Excavation (in feet) **minus 2 feet** because 2 feet
from the top will be cut off and not left in place.
Thickness (in inches) for depths of excavation less than 7'= 4" (2" on both sides)
Thickness (in inches) for depths of excavation greater than 7'
but less than 18'= 6" (3" on both sides)
Constant = 1.4 (for cross bracing and whalers)

$$\frac{L * D * T * 1.4}{1000}$$

For depths of excavation less than 7' (Which is not usual) this becomes:

$$\frac{L * D * 4 * 1.4}{1000} = L * D * 0.0056 = ____MBM$$

For depths of excavation greater than 7' but less than 18' (Which is usually the case) this becomes:

$$\frac{L * D * 6 * 1.4}{1000} = L * D * 0.0084 = ____MBM$$

Note: This is just for estimating purposes. The actual quantity for payment is measured in the field.

e) Sheathing and shoring including steel beams should be used for excavations greater than 18' or where other reasons warrant it or where good engineering judgment requires it. There may be instances where sheathing and shoring with steel soldier beams may not be required such as areas where v-cut or step sheathing may be used. These special situations shall be evaluated on an individual basis and shall be approved by the Water/Sewer Engineering Supervisor. Payment for sheathing and shoring including steel beams is included with the price bid for excavation. The Contractor shall submit shop drawings to the Manager of Design for approval prior to excavation.

2. Length of Pipe

a) The length of each size of pipe sewer or each combination of separate system sewers shall be calculated. Pipe length shall be calculated through manholes. Pipe length shall <u>not</u> be

calculated through wellholes or drop manholes. Where there is a pipe size change at a manhole the larger pipe size shall extend through the manhole and be measured accordingly.

b) Use 6 feet of lateral piping for the quantity of lateral piping needed for each existing lateral connection, unless additional lateral piping is specified.

c) The length of inlet pipe shall be calculated separately.

3. Inlets

a) The number of inlets of each type shall be calculated separately.

4. Manholes

a) The number of each type of manhole (e.g. manholes for pipes 30" and under).

5. Paving

a) Repaving quantities in asphalt surfaced streets shall be calculated using similar limits as shown in the current Water Main Standard Details and Corrosion Control Specifications.

b) Repaving quantities in concrete surfaced streets, concrete driveways and footways shall be based on replacement to the existing joints or a saw cut depending on the wording of the specifications.

c) Footway paving is replaced in kind, with quantities extended to the next joint.

d) Binder quantities, when not specified by Streets Department, shall be based on a 1.5 inch thickness weighing 100 pounds per square yard per inch thick, and specified in tons.

e) Backfill in State Highways shall be (2RC) from 6 inches above the sewer to the bottom of the concrete base. (2RC) is specified in tons (use 100 pound/cubic foot).

f) Concrete base in State Highways shall be 10 inches thick high-early strength concrete.

g) Concrete base in City Streets shall be 8 inches thick.

h) Repaving quantities in City and State Highways are specified separately.

i) Whenever a curb requires removal, the footway will require replacement to at least the first joint and the cartway shall be reconstructed for 2 feet from curb.

j) When the proposed sewer is located in a City Street so that the outside of the trench is within 3 feet or less from curb, the repaving shall extend from cutback line on one side, to the curb on the other. In addition the curb and one block of footway shall be evaluated for potential replacement.

k) When the proposed sewer is located in a State Highway so that the outside of the trench is within 4 feet or less from curb, the repaving shall extend from cutback on one side, to the curb on the other. In addition the curb and one block of footway shall be evaluated for potential replacement.

l) When the proposed sewer is located in an intersection of a State Highway and a City Street, the State Highway paving requirements shall extend up to the projected curb lines of the State Highway where the City Street paving requirements shall begin.
Such shall be noted in the specifications. The paving quantities shall reflect this.

m) When the water trench is located near the sewer trench, the paving between trenches shall also be removed and repaved.

n) If the Streets Department paving requirements request additional paving to be added to the contract and will be paid for by the Streets Department, those quantities should he

separated and placed in the proposal of the specifications as a separate section of P-items and an X should be added to the suffix of the work number. In addition, the front office staff of the Design Branch shall be notified.

o) Where full width street restoration is required, a full width 6" stone sub-base shall be required. This will be a separate payment item in TONS (use 100 pounds per cubic foot).

p) For full width paving there are different paving items than for trench restoration. The Water/Sewer Engineering Supervisor should be contacted for which items to use prior to preparing the quantities and specifications.

6. Curb
   a) When the proposed sewer is located so that the outside of the trench is within 3 feet of the curb on City Streets or 4 feet on State Highways, valuation of the curb and footway to the first joint shall be performed.
   b) Full width street reconstruction usually requires curb replacement which in turn requires the replacement of at least one paving block of footway.
7. Quantity Tabulation
   a) See Appendix III for the Sewer Quantity Sheet [82]. Direct link to Sewer Quantity Sheet.

K. Green Stormwater Infrastructure

1. For Green Stormwater Infrastructure, see the GSI Planning and Design Manual at http://philadelphiawater.org/gsi/planning-design/.

L. Cured in Place Pipe Lining (CIPP)

1. Sewer reconstruction may not be the preferred method to rehabilitate an existing sewer. Using a CIPP liner may be a consideration in many cases including the following:
   a) heavy/severe utility conflict
   b) under/alongside active rails
   c) under/along streams/rivers/creeks
   d) sanitary only replacement in separate sewer system areas
   e) sensitive business areas
   f) high traffic areas
   g) downtown locations
2. If you are considering a CIPP liner replacement method, you must first get the approval of the Water/Sewer Engineering Supervisor before pursuing the change in scope of work. If a significant utility conflict is found during the drafting of the base plans, the engineer or consultant shall contact the Water/Sewer Engineering Supervisor to discuss the potential for a trenchless solution (CIPP or other method). This may save unnecessary drafting hours/expense for a full base plan when one is not necessary for CIPP (See base plan requirements below).
3. The existing pipe size and capacity also must be a consideration. The sewer must not be in a surcharged condition, or need to be upsized. Planning will determine if the existing sewer is surcharged. Consultants should ask the Water/Sewer Engineering Supervisor who in turn will ask Planning.

4. Conditions for Lining
    a) Circular sewers must not be out of round by more than 10% to 15%. A point repair may be completed prior to lining to fix the defect prior to lining. If there are many repairs required, reconstruction should again be considered.
    b) Access to sewer manholes on both ends of the segment is required. A manhole may be added, if practical, to the end of a sewer segment to facilitate the lining. This would be built concurrent to the lining work if at all possible.
    c) A sewer inspection video is REQUIRED on all potential lining projects.
    d) A sewer video should be requested through the Water/Sewer Engineering Supervisor only. The PWD Flow Control Unit will complete the video at their earliest convenience.
    e) Once the video is completed, the condition of the sewer should be assessed.
    f) If there are significant repairs required or the sewer cannot be lined, reconstruction or another method of replacement shall be discussed with the Water/Sewer Engineering Supervisor.
5. Base Plan Requirements

    The base plan requirements are less than a standard base plan. They should show:
    a) The city plan drawn to scale.
    b) The sewer and sewer vent as-built location including manholes with the rim and invert elevations.
    c) All properties.
    d) All inlets and inlet pipes.
    e) An example of a completed lining base plan can be provided to the consultant upon request.
    f) The sewer limits to be lined shall be called out in bold, including the manholes within the limits of the lining.
6. Design Requirements
    a) Planning shall provide the Estimated Theoretical Dry Weather Flows for each location to be lined. A formal email request must be submitted from a consultant to Planning with the Water/Sewer Engineering Supervisor copied.
    b) A liner thickness calculation shall be provided by the Engineer or Consultant using the ASTM F-1216.
    c) A chart showing the minimum liner thicknesses required including the sewer sizes, lengths and thicknesses to be lined shall be shown on the Contract Plans.
    d) Contact the Water/Sewer Engineering Supervisor for an example of a completed lining contract plan.
7. Manhole Lining
    a) All manholes within the limits of CIPP rehabilitation shall be lined.
8. Specifications
    a) SECTION 2705 MANHOLE LINING and SECTION 2768 SEWER LINING shall be added to all lining projects.

Contract Review

6

For submittals in Section 6, the Manage of Design shall be copied on all physical correspondence. Any electronic correspondence shall be copied to the Water/Sewer Engineering Supervisor and the PWD Project Engineer.

A. Base Plan Review

{77} {110} {119} Base Plans will be reviewed by the Design Branch and the Planning Unit. **Consultants** shall submit the base plans and the utility information online at the WEXD website. To gain access to the website for the first time, send an email to Matthew Fulmer. (Matthew.Fulmer@phila.gov)

A notification of the submittal with a link to the plans on the WEXD website shall be sent to

Jeffery Twardzik, Water/Sewer Engineering Supervisor
Jeffrey.Twardzik@phila.gov
(AND)
Erik Haniman, Linear Asset Planning Manager
Erik.Haniman@phila.gov
(AND)
Matthew Fulmer, Water/Sewer Engineering Supervisor
Matthew.Fulmer@phila.gov
(AND)
The PWD Project Engineer (if known)

For Contracts with multiple locations, the base plans for all locations in that contract shall be completed and submitted together. The Planning Unit will do a thorough review of the base plans along with the sewer hydraulic review (see Sections 5 A.1 [106]) and/or water main sizing (see Section 4 A.1 [107]). Design will do a cursory review. Once the base plans have been submitted to Design, the **Consultant** shall submit (e-mail) a request to the Water/Sewer Engineering Supervisor to confirm their linear footage. The Water/Sewer Engineering Supervisor shall reply with a preapproval e-mail for the Base Plans. This preapproval e-mail must be included with the consultants invoice (see Section 8 [108]). This preapproval is only for length and general appearance. Any changes required by Planning or by Design during review of the design must be made by the consultant at no additional cost to the PWD.

B. Green Review

In combined sewer system areas only, the PWD Project Engineer will notify the Green Stormwater Infrastructure Unit (GSI Unit) that the water and/or sewer Base Plans are on WED/WEXD once the base plan is approved by the Water/Sewer Engineering Supervisor.

Philadelphia Water Department – Green Stormwater Infrastructure Unit
Connie Bird 215-686-9430
Connie.Bird@phila.gov
(AND)
Jessica K. Brooks 215-685-6039
Jessica.K.Brooks@phila.gov

The GSI Unit will determine if there is an opportunity for the inclusion of Green Stormwater Infrastructure (GSI). Where GSI is deemed suitable for a project site, the GSI Unit will provide a design concept and scope of work to PWD Design for implementation on the Water and/or Sewer project. For Consultant projects, the GSI concepts will be distributed by the PWD Project Engineer, and a proposal for the GSI work shall be submitted to Design for approval.

C. PWD Preliminary Design Review

1) For in-house and Private Cost Contracts, prior to submitting projects to other utilities for review, the preliminary water and/or sewer designs shall be reviewed by the PWD Project Engineer and Water/Sewer Engineering Supervisor. If necessary, submittals to Water Conveyance, Collectors Systems, GSI Maintenance, and/or GSI Design (See Section 6.D.2 [119]) may take place at this stage instead of Utility Review.
2) For Consultants, upon completion of the preliminary design, the design shall be considered 50% complete (see Section 8 B.3 [111]) and shall be submitted for review. Plans shall be submitted online to the WEXD website. Design shall be notified via email that the plans have been submitted to the website with a link to the plans. If requested by the PWD Project Engineer, submittals to Water Conveyance, Collectors Systems, GSI Maintenance, and/or GSI Design (see Section 6.D.2 [119]) may take place at this step instead of Utility Review. Comments from all the units (Water Conveyance, Collector Systems, GSI Maintenance, GSI Design) will be reviewed by the Design Branch for final approval.
3) {30} {63} Notifications shall be sent to the following:

Jeffery Twardzik, Water/Sewer Engineering Supervisor
Jeffrey.Twardzik@phila.gov
(AND)
The PWD Project Engineer

D. Utility Review

PWD PRELIMINARY DESIGN REVIEW COMMENTS SHOULD BE ADDRESSED PRIOR TO SUBMITTING TO OTHER UTILITIES (all jobs)

Once the drawings have been reviewed and corrected in accordance with PWD's Preliminary Review comments they shall be submitted back to the PWD Project Engineer and Water/Sewer Engineering Supervisor, Water Conveyance, Collectors Systems, GSI, and to the various agencies, for their comments. The transmittal letter to the utility should state any foreseen conflicts or questions that the designer may have.

The amount of time to complete the utility review process may vary greatly depending on the complexity of the project. Included in the utility review process may be further explanatory correspondence and/or meetings which may be required to satisfactorily coordinate the PWD's proposed work with other utility companies and agencies. Coordination with the Streets Department in regards to traffic maintenance, paving requirements and ADA ramp designs (where ramps will be impacted) is also a big part of the utility review process. See Appendix IVc for guidance regarding ADA ramp design requirements and submittals [92]. Requests for project reviews shall be sent to D.1 through D.8 of this section if applicable. Also see Appendix VI if additional contact information is required [35].

1. Utility Review (All Jobs)
   a) Electronic sets will be sent to:
      1) The PWD Project Engineer
      Copy: Jeffrey.Twardzik@phila.gov
2. {119} Utility Review (All Jobs where the PWD Project Engineer did not request an Operations submittal as part of the Preliminary Design Review)
   a) A letter of transmittal and a link to the plans on WED/WEXD will be sent to:
      1) Philadelphia Water Department-Water Conveyance
      Mr. Brendan Reilly, Chief, Water Conveyance — Expectations
      Brendan.Reilly@phila.gov — 215-685-6209
      Electronic set (only water sheets)

      2) Philadelphia Water Department-Collector Systems — Expectations
      Benjamin Jewell, Chief, Collector Systems — 215-685-6203
      Benjamin.Jewell@phila.gov
      Copy: Stefan.Jacobson@phila.gov
      Copy: Nicholas.Maliha@phila.gov
      Electronic set (only sewer and green infrastructure sheets)

      3) Philadelphia Water Department-GSI Maintenance — Expectations
      Gerald Bright, Supervisor, GSI Maintenance — 215-685-4953
      Gerald.Bright@phila.gov
      Electronic set (only green infrastructure sheets)

4) Philadelphia Water Department – GSI Design
Elizabeth Lutes
Elizabeth.Lutes@phila.gov
Electronic set (all GSI deliverables except GreenIT)

3. {31} {64} {114} Utility Review (all jobs except off street (past the houseline) work)
   a) An electronic set and a letter of transmittal are sent for Paving Requirements to:
      1) Streets Department
      Dhanya Jacob — Expectations
      Dhanya.Jacob@phila.gov — 215-686-5511
      Electronic set

   b) If traffic plans are required (by PWD Project Engineer) submit one set of prints and a letter of transmittal to:
      1) Streets Department (Enclosure: 1 set)
      Municipal Services Building, 9th Floor, Room 980
      1401 J.F. Kennedy Boulevard
      Philadelphia, PA 19102-1675 — Expectations
      Attn.: Charles Saunders — 215-685-1207

   c) Two sets of prints and a letter of transmittal are sent for Protection of Street Trees Requirements to:
      1) Philadelphia Parks and Recreation (Enclosure: 2 sets)
      Street Tree Management Division Office
      1515 Arch Street, 10th Floor
      Philadelphia, PA 19102 — Expectations
      Attn.: Frances Piller, District Manager

4. Utility Review (all jobs)
   a) One set of prints (except as noted) and a letter of transmittal are sent to the following utilities on all projects.
      1) Verizon (Enclosure: Electronic set)
      Brian M. Magee — Expectations
      brian.m.magee@verizon.com — 215-351-6051
      Copy: michael.wagner@cyient.com
      Copy: anthony.s.portolese@verizon.com

      2) PECO Energy (Enclosure: 1 set)
      830 South Schuylkill Avenue
      Philadelphia, PA 19146 — Expectations
      Attn.: Louis Robinson — 215-731-3283

3) PGW See Appendix VId [118]
An email with a pdf of the plans should be sent to (both, if applicable) the respective engineers. Email addresses are listed at the top of Appendix VId.

Additionally, a hard copy of the plans may be sent, addressed to the respective engineers at:

800 West Montgomery Ave. 2nd Floor Expectations
Philadelphia, PA 19122

4) SEPTA (Enclosure: Electronic set)
Dennis Stefanski
dstefanski@septa.org Expectations
David Higgins
dhiggins@septa.org

5) Comcast Cablevision (Enclosure: Electronic set)
Carol Pool
Carol@americomm-llc.com Expectations

5. Utility Review (on all jobs with water mains or if a fire hydrant will be moved)
   a) {116} One set of prints of all water sheets marked according to the instructions as described in Section 4 B.9.i [102] and Appendix IVa [93], are sent for Fire Hydrant Location Approval to:

      1) Philadelphia Fire Department (Enclosure: 1 set)
      Planning & Research
      240 Spring Garden Street
      Philadelphia, PA 19123 Expectations
      Attn.: Lt. Gregory Brown 215-686-1354

6. Utility Review (on all jobs with water mains)
   a) One set of water prints is sent for corrosion control requirements to one of the following:
      1) Corrpro Companies, Inc. (Enclosure: 1 set) Expectations
         580 Lancaster Avenue
         Malvern, PA 19355
         Attn.: Ed Richey Phone: 484-881-6213
         erichey@aegion.com Cell: 610-620-5300

         (OR)

      2) Cor-Trol Services, Ltd. (Enclosure: 1 set)
         47 General Warren Blvd.
         Malvern, PA 19355
         Attn.: George Gehring, PE 484-786-9414

7. Utility Review (when located in Fairmount Park)
   a) When the proposed water main or sewer is located in Fairmount Park, one set of plans shall be sent to:
      1) Philadelphia Parks and Recreation (Enclosure: 1 set)
         1515 Arch Street, 10th Floor
         Philadelphia, PA 19102 Expectations
         Attn.: Stephanie Craighead 215-683-0210

8. Utility Review (when located within a State Route)
   a) If a project has work within the limits of a State Route, a Highway Occupancy Permit will be needed for said work. After the design is completed, PWD will use PennDOT's Electronic Permit System (EPS) to apply for the permit. In order to facilitate that process the Pre-EPS Submission Checklist must be filled out and submitted to PennDOT with the 70% Utility Review submittal, see the checklist and instructions in Appendix IVi [117]. This will give PennDOT an opportunity to review it (even though some of the information will be missing

   at this stage) so that when PWD submits for the permit the review process will be quicker.

   The 70% submittal, including the checklist and highlighted PDFs of the plans, shall be emailed to Calene Maroski (camaroski@pa.gov) and Matthew Miele (mmiele@pa.gov) at PennDOT for review.

   After the 90% submission, permit applications will be created by PWD on PennDOT's EPS website https://www.dot14.state.pa.us/EPS/home/home.jsp. Therefore, if there are no ADA ramps on state routes, the completed Pre-EPS submissions checklist must be included with the 90% submittal to PWD. If there are ADA ramps, proceeded to Section 6 D.8.b below and the Pre-EPS submissions checklists are not required with the 90% submittal since PWD will already have them.

b) After the paving letter from the Streets Department is received with the locations for the ADA ramps, the locations shall be confirmed with the PWD Project Engineer. If any ramps are within the limits of a State Route, once designed, the ADA ramp plans and form CS 4401 shall be submitted to the Streets Department as well as the PWD Project Engineer. The PWD Project Engineer will use PennDOT's Electronic Permit System (EPS) to forward the design to PennDOT.

In order to facilitate that process, the Pre-EPS Submission Checklist that was submitted to PennDOT with the 70% Utility Review submittal and the highlighted PDFs of the plans (Highlight sewer, water and /or green only within the limits of the State Route. Do not highlight ADA ramps.) must be submitted to the PWD Project Engineer along with another Pre-EPS Submission Checklist just for the ADA ramps (For the **Work Summary**, write ADA Ramps). Expectations

Submissions for ADA ramps that are on State Routes (submitted to the PWD Project Engineer) should be concurrent with the Streets Department submission. Both reviews should go in parallel because PennDOT and the Streets Department communicate with each other during the review process. Also, PennDOT would prefer the ADA Ramp designs and CS4401 forms to be combined into one pdf for state routes. Additionally, limit the number of ramps per package to 6 intersections or no more than 40 ramps.

9. Utility Review (when Public Property-Communications (formerly Electric Bureau), Public Property-Transit, or Western Union present in job area)

a) One set of plans shall be sent to: Expectations

1) Eric Boone, Communications Operations Manager (Enclosure: 1 set)
City of Philadelphia
Office of Innovation and Technology
Communications Division
1234 Market Street, Suite 1800
Philadelphia, PA 19107 215-686-4577

10. Utility Review (Other Utility or Agency)

a) One set of plans shall be sent to any other utility or agency at a particular location.

11. {101} Railroad Review (if affected)

a) When the proposed water main or sewer parallels or crosses any rail structure or Right-of-Way belonging to and/or operated by the railroads, the requirements of that specific railroad shall be followed. A call to that railroad should be made in order to determine how many sets of plans they require for their review. The railroad's pipeline occupancy specifications and requirements and the railroad crossing form (Pipe Data Sheet) shall be requested from the railroad (they may also be attained from their web page). **Some** railroads require **eight (8) sets** of the appropriate plan (**rolled not folded**) showing elevations and profile in accordance with the railroad's pipeline occupancy specifications and requirements, along

with three copies of a completed Railroad Crossing Form (Pipe Data Sheet). Contact information for railroads is listed below:

1)Consolidated Rail Corp. (www.conrail.com) (Enclosure: As requested by RR)
1717 Arch Street, 32nd Floor
Philadelphia, PA 19103 Phone: 856-231-7233
Attn: Anthony R. DiArenzo (Real Estate) Fax: 856-231-2432

2)CSX Transportation, Inc. (www.csx.com) (Enclosure: As requested by RR)
301 West Bay Street, Suite 900
Jacksonville, Florida 32202
Attn.: Corridor Occupancy Services (J180)
Permitting Contact: Charlie Myers 904-633-1503

3)Norfolk Southern Railway Company (www.nscorp.com)
Applications for pipe crossings are submitted to:
AECOM (Enclosure: As requested by RR)
Attn: NS Pipe and Wire Administrator
1700 Market Street, 16th Floor
Philadelphia, PA 19103
NSUtilities@aecom.com

4)AMTRAK (www.amtrak.com) (Enclosure: As requested by RR)
30th Street Station
Philadelphia, PA 19104 215-349-1108 / 4848

5)SEPTA (www.septa.org) (Enclosure: As requested by RR)
1234 Market Street
Philadelphia, PA 19107
Attn: Dennis Stefanski (dstefanski@septa.org)
Phone: 215-580-8255 / 215-964-4578

A copy of the correspondence sent to any railroad shall be sent to the following without any sets of plans:

1) Philadelphia Water Department
ARA Tower, 2nd Floor
1101 Market Street
Philadelphia, PA 19107
Attn.: Mr. Brian Mohl, Manager Capital Program 215-685-6339

2) Philadelphia Water Department
ARA Tower, 2nd Floor
1101 Market Street
Philadelphia PA 191 07
Attn.: Mr. Vahe Hovsepian, Manager, Design Branch 215-685-6279

b) All projects involving railroad review shall be discussed with the Water/Sewer Engineering Supervisor during the design phase.

12. {19} {54} Assessments (only for extensions to the system that are not private cost projects)
    a) For assessable jobs (those having an "A" (that are not Private Cost), "B", or "C" (that are not Private Cost) in the suffix of the Work No.) two sets of prints are sent to the appropriate District Surveyor (See Appendix VIc for a list of survey districts [79]) to obtain the preliminary assessment and "deducts". This information shall be added to the Contract Drawings (see Section 2 D.2.c [103]) and Section 3 D.2.d [104])).

13. Streets Department Right-of-Way Unit Review
    a) In any situation when the curbline is moved horizontally, a set of plans in PDF format will be sent to:

        1) Streets Department
           Christopher Renfro, Engineering Supervisor
           Christopher.Renfro@phila.gov
           Electronic set

E. Review Expectations

1. Typical response from PWD Preliminary Design Review 6 D.2.a.1

Water Conveyance will send both a response letter and a highlighted plan set to the PWD Project Engineer (in .pdf via email). The Water Conveyance comments should be reviewed by the PWD Project Engineer or the consultant considering the total context of the project. For consultants, if additional work is requested it should be approved first by the PWD Project Engineer. The Water Main Relay plans will have the proposed water mains highlighted in yellow, the existing water mains that will be abandoned because of the proposed water main relay highlighted in orange, and the existing water mains that will not be abandoned highlighted in blue. Additional comments, such as which valves are to be returned (if any) to the Philadelphia Water Department yard, may also be included on the plan sheet. The response letter "Capital Improvement Water Main Relay Contract Plan Review Comments," will state comments or recommendations (if any). Their comments (if any) may pertain to the proposed water main design and/or existing water main layouts (if existing water mains are laid out incorrectly, potentially impacting proposed design work). Water Conveyance will also state if any large diameter transmission mains (16 inch diameter and above) will be affected (temporarily shut down due to proposed water main work) and that coordination for any work impacting the transmission mains must be coordinated with the Load Control Operations Supervisor. Also, their letter would typically conclude by stating which valves are to be returned to the PWD yard at 29th and Cambria Streets, if any, upon completion of construction.

2. Typical response from PWD Preliminary Design Review 6 D.2.a.2

Collector Systems will send multiple documents to the PWD Project Engineer as part of their review. The first is their Response Letter/Memo which may or may not have specific comments related to the proposed sewer design. The Collector Systems comments should be reviewed by the PWD Project Engineer or the consultant considering the total context of the project. For consultants, if additional work is requested it should be approved first by the PWD Project Engineer. If the letter does not have specific comments on them, then the letter will mention to refer to the plan sheets for any and all comments. The letter/memo will be in .pdf format. The second document sent will be the Sewer Reconstruction plan sheets themselves marked up in .pdf format. This review will entail any and all sewer related (proposed, existing) concerns. This can include, but not be limited to, manhole and inlet concerns such as location, types, sizes, etc., sewer/inlet pipe location/tie-in points, and so forth. On the plan sheets, they will also assign a symbol designation of sorts (A1, B1, C1, etc.) at each manhole regardless of whether it's a proposed or existing manhole. This designation correlates to the third document as part of Collector Systems' review, which is a Microsoft Excel document that contains the manhole numbers. Manhole numbers are semi-smart. They all start with the outfall number that they drain to. The outfall or the intercepting chamber is the beginning. The numbers then go upstream up the main sewer counting by fives. If additional manholes are found or added after the initial assignment, numbers in between the fives are used. Once the main sewer is numbered, manholes on the lowest branch are numbered followed by the next branch up and so on. Following the outfall number there may be other letters: "U" stands for upper end manhole in a combined system, "M" stands for summit manhole in a separate system and "S" stands for sanitary manhole in a separate system. Sanitary manholes start with the outfall number of the stormwater conduit associated with it. The Excel file will state the block location, sheet number and a manhole number for every PWD manhole on the sheet. Many proposed manholes will have the same number as an existing manhole in the same relative position. If more manholes are proposed than existing, additional numbers between the fives will be assigned. If fewer manholes are proposed than existing, the numbers that are not used may or may not be listed as Omitted (GIS removes all existing manhole numbers and inserts all proposed manhole numbers). Manhole numbers of those manholes shown on the

sheet but not affected by the project are listed as Reference Manholes. Abandoned manholes are listed as abandoned and not reused. Private manholes that are connected to the PWD system are also numbered. Additionally, Outfalls are numbered along with Chambers and Dry Weather Outlet Manholes (starting from the chamber and numbered downstream by fives) and Stormwater Outlet Manholes (starting from the chamber and numbered downstream by fives).

3. **Typical response from PWD Preliminary Design Review 6 D.2.a.3**
   Green Stormwater Infrastructure (GSI) Maintenance will send the PWD assigned engineer a word document, which would then be forwarded to the PWD Project Engineer or Consultant. The Memo/Response Letter will have comments related to the proposed design and maintenance of the GSI drainage system. Such comments can include, but not be limited to green inlets, pretreatment devices, green pipe layout, access to systems, and so forth. Additional attachments may be included as part of their utility review.

4. **Typical response from Utility Review 6 D.3.a.1**
   Streets Departments (Paving) will send a letter in .pdf format to the requester that will contain their paving restoration recommendations. Their paving restoration recommendations would mention their instructions for blocks therein that would require either standard trench restoration or full width/depth roadway restoration, whether it's for a City Street or a State Route (PennDOT). For standard trench restorations, Streets will require saw-cutting trench widths prior to excavating, restoring trench with eight inch (8") or ten-inch (10") high early strength concrete base, topping the base course with Superpave binder course and wearing course. They will also state how much additional cutback (saw-cut) is necessary for asphalt restoration as well as sealing the edge of trenches between new and existing asphalt limits with Asphalt Cement Class AC-20. If the limits of the trench restorations (asphalt cutbacks) for all proposed infrastructure exceed 50% of the street width, then the Streets Department would then recommend full width/depth restoration, which would entail replacing/restoring the asphalt and concrete base from curbline to curbline. The existing curbs and a specified width of existing footway will also be replaced and/or restored in kind. Another key cog of information stated in their response letters are the quantity of ADA curb ramps that need to be upgraded and reconstructed to current ADA standards. The quantity of ramps will be called out by intersection, which corner/baring, and the numbers of new ramps per location. The quantity of ramps will be dictated by the limits of proposed work, whether it's due to new water relay, sewer reconstruction, and/or construction of green infrastructure. An agreement made between PWD and Streets mentions that any proposed excavation/saw-cut through an existing ramp or within five (5) feet of that ramp will require said ramp to be designed and constructed to current ADA standards. A stipulation with this agreement comes in the form of an existing fire hydrant removal. If a fire hydrant is to be removed/abandoned due to proposed PWD work, then the ramp will be labeled as "Fee In Lieu," in which Philadelphia Water will reimburse Streets Department the cost for the ramp, but PWD will not be responsible for the survey and design of said ramp. Submittal procedures are also included in the response letter.

5. **Typical response from Utility Review 6 D.3.b.1**
   Streets Department (Traffic) will review traffic plans. For all other projects, use the standard language in the Master Specifications for the Special Specifications which calls for traffic lanes to be maintained and trenches to be backfilled during non-working hours.

6. **Typical response from Utility Review 6 D.3.c.1**
   Parks and Recreation will send a response letter via email to the requester in Microsoft word document (doc.) format. If trees are to be replaced, a separate Tree Planting Schedule sheet will be included in Microsoft Excel format. Their letters will typically state to include the standard Tree and Soil Protection letter in the project

specifications (Item 6-9002), protect any existing street trees during construction, and that the contractor will be responsible to replant any trees that are disturbed during construction.

7. **Typical response from Utility Review 6 D.4.a.1**

Verizon would send a response letter (mailed and/or in .pdf format) typically stating for the Contractor(s) to exercise caution and properly support when excavating near any of their infrastructure to avoid any conflicts. They will more than likely mention where potential conflicts (direct conflicts and crossings) are located in their response letter. Their letter will also state to have the contractor notify PA One Call 72 hours prior to excavation to permit Verizon time to mark existing Verizon underground facilities.

8. **Typical response from Utility Review 6 D.4.a.2**

PECO would send a response letter (mailed and/or in .pdf format) typically stating for the Contractor(s) to exercise caution and properly support when excavating near any of their infrastructure to avoid any conflicts. They will more than likely mention where potential conflicts are located in their response letter. If any PECO Energy aerial facilities need to be relocated due to proposed work, their letter would then state that they require at least 12 weeks' notice and payment in advance.

9. **Typical response from Utility Review 6 D.4.a.3**

PGW will typically send a response letter via email to the requester in Microsoft Word document (doc.) format. Their letters will state how much, if any, of their existing infrastructure/piping (length, size, material, and location) will be relocated due to proposed Philadelphia Water work. Their letter will also note to use precaution when crossing underneath existing PGW facilities and to follow PGW's DS 40.7 and 53.8 if and/or when doing so.

10. **Typical response from Utility Review 6 D.4.a.4**

SEPTA will send a letter to the requester. This response letter will list potential or direct conflicts which may pertain to their existing underground systems (i.e. – duct banks) or aboveground systems (i.e. - bus routes, trolley tracks, etc.). This letter will also state to contact SEPTA before construction if any power shutdowns need to be implemented or to ensure proper coordination if any bus routes will be affected due to active construction.

11. **Typical response from Utility Review 6 D.4.a.5**

Comcast may not reply. Use the standard language in the Master Specification for the Special Specifications.

12. **Typical response from Utility Review 6 D.5.a.1**

The **Fire Department** will send or deliver a physical enveloped letter signed by the Lieutenant that states whether or not there is a conflict. Comments (if any) may be in regards to proposed fire hydrant locations, sufficient coverage between proposed hydrants, hydrants to be abandoned, etc. Their letter will also typically state that the Fire Department requires the bonnets of new fire hydrant installation to conform to color codes, based on size of the water main that the hydrant is connected to. See Section 4 B.9.d)

13. **Typical response from Utility Review 6 D.6.a**

The corrosion control consultant (**CorTrol or Corrpro**) will send a response letter to the requester. The response letter will state the results of their field investigations and any measures that may need to be taken to protect the proposed water main from corrosive soil and/or stray currents. The response letter will delve into sources and/or severity of stray current activity and the data therein that they collected to determine if special control measures need to be taken. Their response letters will also include the results of the Soils Survey that they performed (also attached as appendix at the end of the letter), measuring the soil resistivity (based on Extreme Value Analysis) of the soils within the project scope to classify the corrosiveness of the soil

(severe, mild, moderate). Their letters will then recommend whether or not special control measures need to be taken. If special measures need to be taken because of on-site corrosive soil, they will request that the complete AutoCAD version of the proposed water main relay sheets be emailed to them so they can draw in where their control measures (test stations) are to be positioned, as well as other information necessary for proper preventative corrosion control measures. These plans will eventually be printed as mylars, signed by the corrosion control consultant, and delivered to the requester. These mylars are numbered as "W" sheets. Therefore the total number of "W" sheets must be changed if corrosion control mylars are added to a project. The addition of corrosion control mylars will also increase the total number of sheets on a Water and Sewer project. Since the corrosion control consultant does not know the number of sewer sheets on a project, it is not necessary to have the total number of sheets on the entire project on the corrosion control mylars.

14. Typical response from Utility Review 6 D.7.a.1

Parks and Recreation will send a response letter via email to the requester in a Microsoft word document (doc.) format. The letter may delve into details such as tree protection (critical zone, prohibited protection zone, fencing, tree replacement/assessment, species, etc.), limits of disturbance fencing, erosion and sentiment control measure recommendations, planting plans and schedule approvals/recommendations, and so forth.

15. Typical response from Utility Review 6 D.8

If a project has work within the limits of a **State Route**, then a permit will be needed for said work. PennDOT will reply by email to the requester with any comments and concerns they have from the 70% submittal.

After PWD submits the EPS permit application, an email (ePermitting Help) will be sent to the creator of the permit application stating any comments that they may have, as well as to submit a check (monetary amount is dependent on the limits of proposed work) to PennDOT Permits Unit. PWD must make payment within 180 days of the issued Response Letter or else the permit application becomes withdrawn. This issue can be alleviated by submitting a Highway Occupancy Permit Extension Letter as an additional submission to the application.

Only PWD will submit for the permit application since PWD is the owner of the project/contract. Permits applications will be created on PennDOT's EPS website https://www.dot14.state.pa.us/EPS/home/home.jsp

16. Typical response from Utility Review 6 D.9

Public Property-Communications (former Electric Bureau), Public Property-Transit, or Western Union comments will be sent to the requester by the Office of Innovation and Technology. The letter will typically say to support their ducts unless you've asked if the duct can be abandoned.

Contract Finalization

7

A. Checking

1. Upon receipt of the utility responses the Engineer for in-house projects and Consultant for consultant projects shall evaluate all utility comments and check the final design for conformance to the Water Department standards as well as for good engineering judgment.
2. The Engineer for in-house projects and Consultant for consultant projects shall verify all the existing utilities as well as check the new design. On Consultant projects, the Water Department's Engineer only checks the Consultant's new design.
3. Upon completion of the checking process the Engineer shall review the drawings with the Water/Sewer Engineering Supervisor. The PWD's Water/Sewer Engineering Supervisor shall give the okay for final mylar drawings to be printed for both in-house and Consultant projects. For in-house projects, the mylar drawings shall be signed by the Project Engineer, the Water/Sewer Engineering Supervisor and the Manager of Design. For Consultant projects, the signatures shall be provided by the appropriate counterparts in their organization and the drawings shall be stamped by a Professional Engineer licensed in Pennsylvania. See Appendix IIc and IId for examples of Title Blocks [94]. Note: the Water Commissioner and General Manager of Engineering only sign the first sheet. Therefore, those lines should be omitted from all other sheets.

B. Quantities

1. Once the final design is approved the Engineer for in-house projects and Consultant for consultant projects shall calculate the final quantities. Two (2) independent sets of quantities must be prepared on each project. Any discrepancies between the two (2) sets of quantities should be resolved at this time.
2. For in-house projects, the final quantities shall be placed on an input sheet and given to the Specifications Section along with any special verbiage required to be incorporated into the specifications. See Appendix III for water, sewer, and green input sheets [96].
3. For projects done by Consultants, the quantities shall be completed on the PWD Quantities Spreadsheets in Appendix III [96] and be submitted with the Final Design Package. The Quantities Verification form must also be submitted in the Final Design Package.

C. Specifications

1. For in-house projects, the Engineer shall forward the following to the Specifications Section in order for them to prepare the final specifications:
    - Front Office specification folder for the particular project. Folder should contain one (l) copy of all utility responses, except paving and gas where two (2) copies are required. The specification folder shall also contain one (1) copy of the service list.
    - One (1) set of prints
    - Quantity Input sheets
    - Traffic requirements, if unusual, otherwise the Specification Section shall provide the traffic requirements.
    - One (1) copies of the rodent control plan. (Sewer projects only)

- List of return plan reference drawings. (Sewer projects only)
- List of reference contract drawings. (Sewer projects only)
- Borings if required.
- Any special details or paragraphs particular to the specific project.

2. For in-house projects, the Specifications Section shall prepare the final specifications using the input sheet and any specific comments pertinent to that project.
3. For in-house projects, the Specifications Section shall prepare the Engineer's estimate for the contract
4. Upon completion of the specifications for in-house projects, they are returned to the Engineer for his final inspection and approval. It shall be the Engineer's responsibility to insure that the specifications were prepared as required and that all appurtenant paragraphs are included in the final specification.
5. For Consultant projects, the Master Specifications shall be attained from the PWD Water/Sewer Engineering Supervisor. The final specifications shall include all pertinent parts of the Master Specifications and shall be supplemented with any specific comments pertinent to that project. Additionally, the final specifications shall include but not be limited to the following:
    - Traffic requirements.
    - Paving requirements.
    - The rodent control plans. (Sewer projects only)
    - List of return plan reference drawings. (Sewer projects only)
    - List of reference contract drawings. (Sewer projects only)
    - Boring information if required.
    - The Water Service List. (Water projects only)
    - Any special details or paragraphs particular to the specific project.

   The final specifications and Engineer's estimate prepared by the Consultant shall be submitted to the PWD Water/Sewer Engineering Supervisor for final review and approval.

D. Project Summary

1. A Project Summary is required for all projects. Once a project design is complete, the Project Summary should be compiled by the lead designer, which could either be PWD staff or vendor. The Project Summary Sheet will be created using the Project Summaries Guidance Manual (located on the website at http://www.phillywaterdesign.org/project-summaries-guidance-manual.html) and submitted to both the PWD Project Engineer and PWD Public Affairs for review and revision, which could be an iterative process.

   PWD Public Affairs
   Paul.Fugazzotto@phila.gov
   Richard.Orlosky@phila.gov

   Once approved, the Project Summary will be uploaded by Public Affairs to the PWD website for public viewing.

E. Highway Permit Application

1. The process for attaining Approvals for Utility Street Openings Guaranteed Paving Information System (GPIS) **is being updated. Please check with the PWD Project Engineer for updates before completing the forms on the GPIS web application.** [95]

F. Finalization

1. {109} {113} For in-house projects, once the Engineer has completed the final inspection they shall package the following items together in a manila envelope and submit it to the Water/Sewer Engineering Supervisor.
    - Memo from PWD Water/Sewer Engineering Supervisor approving final plans & specs.
    - 1 set of mylar drawings (signed & rolled)
    - 2 sets of prints (1 rolled & 1 folded)
    - 1 copy of the PGW response letter
    - 1 copy of the Philadelphia Streets Department paving response letter
    - 1 copy of the specifications
    - CD or DVD containing the following electronic documents: specifications in Microsoft Word format, design drawings in AutoCAD or Micro-Station format, GPIS spreadsheet in Microsoft Excel format, engineer's estimate of construction cost in Microsoft Excel format, one copy of each utility response letter in Adobe PDF format
    - 1 Transmittal of Tracings Form
    - If GSI work is included, a PWD GSI Design Report as a single PDF. Additionally, supporting files in the formats below shall be provided as separate attachments:
        - Written Report documenting design approach and assumptions (.PDF)
        - GreenIT Data Entry Application Metrics Report (.CSV, .PDF)
        - "Shared" GreenIT Data Entry Application Project(s) with PWD Project Engineer
        - Supporting design calculations and modeling files (XLSX and modeling original files)
        - Drainage area maps (.PDF, .DWG)
2. For consultant projects, the consultant shall complete the Final Design Package Checklist in Appendix IIIf [97], and include it in the final design package. Additionally, the consultant should submit one (1) Letter of Transmittal with the Engineer's estimate. The Transmittal of Tracings Form will be prepared by the Water Department Design Branch.
3. The contract package will be forwarded to Projects Control to advertise, bid and award the contract.
4. Consultants should see Section 8 [112] for billing.

G. Amendments

1. If during the course of advertising the contract it becomes necessary to modify the contract in any way, an amendment shall be prepared. Amendments were previously referred to as addendums or addenda.
2. All amendments shall be prepared in accordance with the Guidelines for Preparing Amendments. (See Appendix Ib [98])
3. Amendments required for projects prepared by consultants due to errors, omissions, negligence, or poor engineering judgment of the consultant, shall be prepared by the consultant at no additional cost to the City.
4. All amendments shall be approved by the PWD Water/Sewer Engineering Supervisor before forwarding to the Projects Control Unit. Consultants shall forward amendments to the Design Branch, who in turn, will forward them to the Projects Control Unit.
5. In addition the Engineer's estimate should be revised, and shall accompany the amendment.

Consultant Billing

8

A. General:

1. {112} Pre-approval from Design must be attained prior to any invoice.
2. Consultants shall submit the base plan or design invoice for all locations of a specific work number at one time in order to minimize billing paperwork. Partial submittals will not be accepted.
3. All invoices shall stipulate the amount remaining in the contract after deducting the amount of that particular invoice.
4. All invoices shall reference the Water Department work number for that particular project and the Consultant's contract number with the City.
5. Invoices shall be submitted to:

Mrs. Alicia Robertson
Philadelphia Water Department
Finance Division
ARAMARK Tower, 5th Floor
1101 Market Street
Philadelphia, PA 19107-2994

For additional information regarding invoicing contact Mrs. Robertson at 215-685-6042

B. Invoice Submittals:

1. {108} Consultants may invoice for base plan preparation upon the completion and submittal of the base plans to the Water Department, Planning Unit. A copy of the preapproval e-mail described in Section 8 B.2. below must be included with the invoice.
2. Prior to submitting an invoice for unit price invoicing for Base Plans, the Consultant shall submit (e-mail) a request to the Water/Sewer Engineering Supervisor to confirm their linear footage (see Section 6 A. [110]). The Water/Sewer Engineering Supervisor shall reply with a preapproval e-mail for the Base Plans.
3. {111} Consultants may submit invoices for a partial payment of 75% of the design fee once preliminary design plans have been submitted to the Water Department. A copy of the preapproval e-mail described in 4. below shall be included with the invoice. Consultants may invoice for the remainder of the design fee at the completion of the design process. The project is considered complete when the Consultant has submitted all of the documents required for contract finalization (See Section 7 E. [109]) and an approval memo has been issued. Again, a copy of the final preapproval e-mail described in 4. below shall be included with the invoice.
4. Prior to submitting an invoice for unit price invoicing for Design Work, the Consultant shall submit (e-mail) a request to the Water/Sewer Engineering Supervisor to confirm their linear footage. The Water/Sewer Engineering Supervisor shall reply with a preapproval e-mail for the Design Work. This may be done twice if provisions for 75% payment stated in 3. above is utilized.

5. For unit price invoicing, the Consultant shall show the respective linear foot estimates on the invoice for the Base Plans or the Design Work and unit price calculations along with the item number. The invoice must also include a copy of the respective preapproval e-mail for the Base Plans, 50% Design Work or final design package.
6. For hourly invoicing, the Consultant shall submit employee time sheets with the invoice to document all work hours covered by the invoice. The Consultant shall also submit a rate schedule if different from the original contract amount. Consultants may invoice monthly for each project as long as the invoice exceeds $1500.00 unless it is the final invoice for the project.
7. The consultant shall submit a Contract Summary spread sheet (see template in Appendix IIIg [99]) along with each invoice summarizing the amount invoiced for each project assigned and the amount remaining in the contract. It shall also show WBE and MBE payments to date and estimated construction costs.
8. Payment for final design shall not be made until the Consultant has submitted all of the documents required for contract finalization (See Section 7 E [113]). The final approval memo must be included with the final invoice.
9. Each consultant will be required to submit an OEO Post Award Compliance form for each MBE and WBE partner (See Appendix IIIh [100]). This form was included as an attachment to the original engineering RFP. At this time, the OEO form will not have to be submitted with each monthly invoice. This form, as well as the supporting documentation, should be submitted to the Design Branch at the end of each contract term (once a year).

C. Water and/or Sewer Design Work:

1. Typically on water-only projects, Consultants are given both the base plan and the design portions of the project.
2. Sewer projects may be sewer only or may be both water and sewer for any given location.
3. If given only the base plan portion or only the design portion of the work, the consultant may bill the Water Department upon completion of the Water Department review and approval memo of that particular portion.

D. Corrosion Control

1. The corrosion control engineering service shall be paid for by the Water Department directly to the corrosion control consultant. The corrosion control consultant shall invoice the Water Department directly. In addition, the Water Department shall receive a copy of the corrosion control report along with prints of the corrosion control plans if required**.**

E. Green Stormwater Infrastructure

1. Green Stormwater Infrastructure shall be done on an hourly basis per the approved proposal, see B.6. above.

F. Roadway Grading

1. Roadway Grading Plans shall be done on a linear foot unit price basis. Consultants may submit invoices for a partial payment of 75% of the design fee once preliminary roadway plans have been submitted to the Streets Department District Surveyor. The remaining 25% of the design fee can be invoiced once the grading plans are completed and have been approved/signed by the District Surveyor. Prior to submitting an invoice, the Consultant shall submit a request to the Water/Sewer

Engineering Supervisor to confirm the linear footage. As part of the invoice documentation, the Consultant shall submit a copy of the letter transmitting the grading plans to the District Surveyor and the preapproval e-mail for the Roadway Grading Plans from the Water/Sewer Engineering Supervisor.

PROCEDURES

Appendix

I

a – Water and Sewer Project Flow Chart
b – Guidelines for Preparing Amendments

Water & Sewer Contract Progression Flow Chart

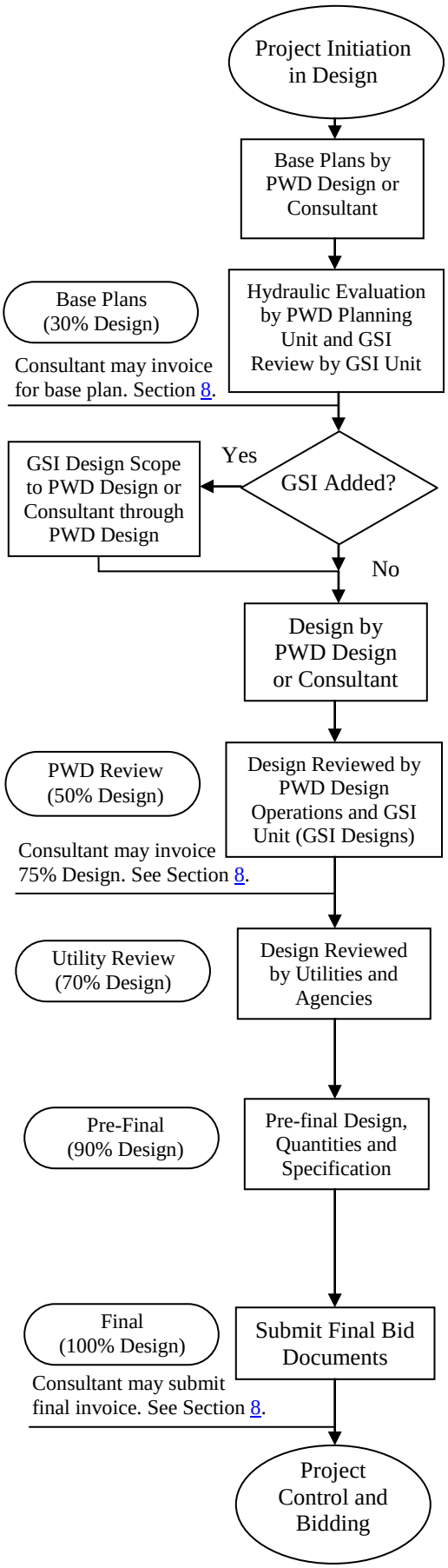

Project enters Design Branch from Planning or Operations (emergency projects). A new project number is assigned and plans are requested through PA ONE-CALL.

The base plan shows all physical features obtained by a field survey, curb and manhole elevations, all existing underground utility information, a cross section and profile of the existing sewer (sewer projects only). See Sections 2 and 3.

Completed base plan is sent to the Water/Sewer Planning Unit for hydraulic review (pipe sizing and limits of replacement). Base plans in combined sewer areas are also forwarded to the Green Stormwater Infrastructure Unit (GSI Unit) to evaluate the sustainability of green storm water infrastructure (GSI) to manage storm water on the streets.

Where GSI is deemed suitable for project site, the GSI Unit shall provide a design concept and scope of work to PWD Design for implementation on the water/sewer project. For consultant projects, the GSI concepts will be distributed by the Design Branch engineer, and a proposal for the GSI work will be submitted to Design Branch for approval.

Upon completion of hydraulic evaluations, project is returned to Design Branch or the consultant to begin the new design. The design process can vary greatly depending on the location and complexity of the job. See Sections 4 and 5.

The preliminary water/sewer/GSI design is submitted to Design, Planning, and Operations units for review and comment. After comments are addressed, the job is sent out for utility review. See Section 6. If GSI is included, borings are ordered if required.

The design plans are mailed out to all of the utility companies, city departments and other agencies that may be impacted by the work. See Section 6. For PWD in-house projects this is done using the GPIS approval system.

Upon receipt of the utility responses, the engineer reviews the design and utility comments and resolves any conflicts. The engineer then computes the quantities and writes any special specifications that may be required. Pre-final design bid package is forwarded to the Design Branch for final review. For GSI designs, a GSI design report and GreenIT entry of final design calculations shall also be prepared; these along with the GSI design plans will be forwarded to the GSI Unit by the Design Branch. Upon receiving comments from the GSI Unit, the Water/Sewer Engineering Supervisor shall issue the final approval.

The final design bid package including signed and sealed mylar drawings, specifications, estimate, utility responses, GSI design report and GreenIT report is forwarded to the Design Branch. See Section 7. For GSI designs, the Design Branch will forward final design report and GreenIT report to the GSI Unit. Design Branch applies for the highway opening permit through GPIS. The project is logged out of design and forwarded to Projects Control for bidding.

PHILADELPHIA WATER DEPARTMENT – DESIGN BRANCH

PROCEDURE FOR PREPARING AMENDMENTS TO CONTRACTS

A. DEFINITIONS

1. Amendment: A written instrument which changes the Bidding Documents and which is issued prior to opening of bids.
2. Bidding Documents: The book of written requirements containing the Instructions to Bidders, Bid Forms, Special Specifications, Standard Contract Requirements, and any miscellaneous documents bound therewith (e.g., sketches on letter size paper, Soil Erosion and Sedimentation Control Narrative), plus the Contract and Reference Drawings.
3. Changes: Revisions, additions, deletions, clarifications of ambiguities, and resolutions of conflicts and errors.

B. COORDINATION

1. Design Branch should notify Projects Control as soon as the need for an amendment becomes apparent. They need advance warning to being their procedures.
2. Design Branch should provide Specifications Personnel with the necessary amendment changes on paper or on compact disc (e.g. bid form quantities or items, technical or boiler plate specifications, etc.) so they can update their records and prepare the necessary amendment pages.

C. MAKING THE CHANGES

1. The two basic methods of making changes to the Bidding Documents are the Narrative Method and the Revised Page Method.
   - 1a. Narrative Method: The narrative method involves a series of instructions to the bidder, telling him/her how to alter the original Bidding Documents.
   - 1b. Revised Page Method: The revised page method involves issuing revised pages (or entire sections, or drawings) to be inserted by the bidder into the Bidding Documents in place of the original pages (or sections, or drawings).

2. Narrative Method:
   - 2a. The Narrative Method is satisfactory for making a few, small changes; extensive or numerous changes should be made by the revised page method. Where it would take longer to explain the changes than to make them, use the revised page method. The governing principle is “emphasize the changes”.
   - 2b. When using the Narrative Method, include enough of the original specification text to make each change reasonably self-explanatory. Remember, however, that the amendment must contain instructions, not explanations. The altered documents should read as original documents.

3. Revised Page Method:

1a. When using the Revised Page Method, make sure that each revised page is clearly marked as an amendment page.

1b. Make sure that each revised drawing or sketch is marked "Revised", and dated. Do not erase anything from the original drawing; use hatching to indicate deletion.

1c. When changing part of a section by the Revised Rage Method:

a. If the number of pages is reduced, insert dummy pages with the note "This Page Intentionally Blank".

b. If the number of pages is increased, insert additional pages with suffixed page numbers (e.g.,…, 02660-4, 02660-4 A, 02660-5, …).

c. If this approach would become confusing, replace the entire section.

4. When modifying the Bid Form, do not make partial changes (e.g., one or two quantities). Issue a revised Bid Form page or the entire Bid Form, to minimize confusion and discourage the submission of informal bids.
5. Be sure that the changes do not make some other part of the work impossible to accomplish.
6. When resolving a conflict, delete the inappropriate material; do not say that one requirement is preferred over another requirement, or should govern over another requirement.
7. Write amendment instructions in the present tense.

D. ASSEMBLING AND SUBMITTING THE AMENDMENT

1. The Construction Specifications Institute (CSI) recommends the following sequence of information within the amendment:

1a. Introduction.

1b. Changes to Prior Amendments.

1c. Changes to Bidding Requirements:

a. Instruction to Bidders.

b. Bid Forms.

1d. Changes to Special Specifications:

a. Changes to Supplementary Conditions.

b. Changes to list of Drawings and Schedules.

c. Changes to General Requirements Sections – in sequence.

d. Changes to Technical Specifications – in sequence.

1e. Changes to Appendices (e.g. sketches on 8½"x 11" paper bound with the specifications).

1f. Changes to Contract Drawings – in sequence.

1g. Changes to Reference Drawings.

1h. Amendment Acknowledgment. (See page 4 of this Appendix Ib)

1i. Attachments – same order as changes.

2. At the end of the Introduction, indicate the number of pages in the amendment and list all attachments (i.e., by page numbers, section numbers and titles, titles of sketches on 8½”x 11” paper, drawing numbers and titles).
3. Use a similar numbering system for items within the amendment to permit future cross referencing.
4. Proofread the amendment carefully for typographical errors.
5. Consultants will submit the Amendment to the Water/Sewer Engineering Supervisor. Design Branch will make copies for Contract file folder and for specifications files. Design Branch will hand deliver the original to Projects Control for processing. No transmittal letter is necessary. Processing through Design Branch front office is not necessary.
6. See page 4 of this Appendix Ib for a sample Amendment Acknowledgment.

AMENDMENT NO. 1 **Dated: Month XX, 20XX**
Bid No.: XXXX
Opening Date: Day, Month XX, 20XX

NOTICE

It is the sole responsibility of the seller to ensure that it has received any and all amendments and the Procurement Commissioner may in his/her sole discretion reject any quote for which all amendments have not been executed and returned.

PROPOSAL FOR

Project No. S-XXXXX-RD
Description XXXXX

IS AMENDED AS FOLLOWS:

GENERAL

XXXX

SPECIFICATIONS

XXXX

PLAN SHEET

XXXX

CONTRACTOR QUESTIONS AND ANSWERS:

XXXX

END OF CHANGES

Seller must acknowledge receipt of Amendments in PHLContracts

DRAWING STANDARDS

Appendix

II

{15} {39} {50} {75}

a – Drawing Size and Borders (Water)
b – Drawing Size and Borders (Sewer)
c – Title Block (Water Drawing)
d – Title Block (Sewer Drawing)
e – Line Styles
f – Lettering
g – Arrow Symbols
h – Symbols for Water Main Fittings
i – Standard Notes for Water Sheets
j – Legend for Sewer Sheets
k – Manholes, Inlets and Appurtenances
m – Standard Notes for Sewer Sheets
n – Symbols for Green Appurtenances

{6}

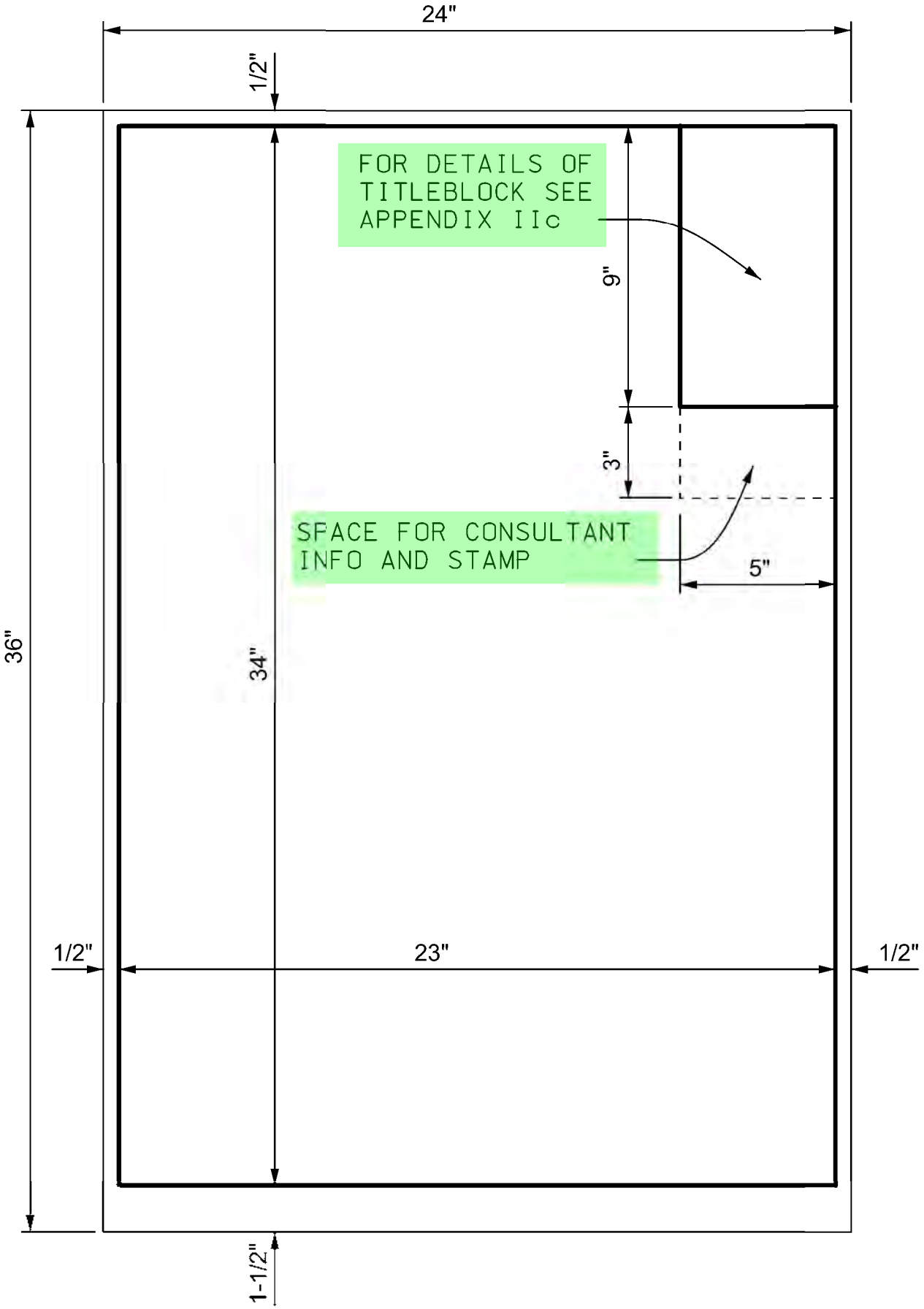

Philadelphia Water Department

APPENDIX IIa

Border Size - Water

{6}

Back to Appendix II

CHECKED BY: FM	DATE: 01/15/2014	PAGE NO. 1 OF 1

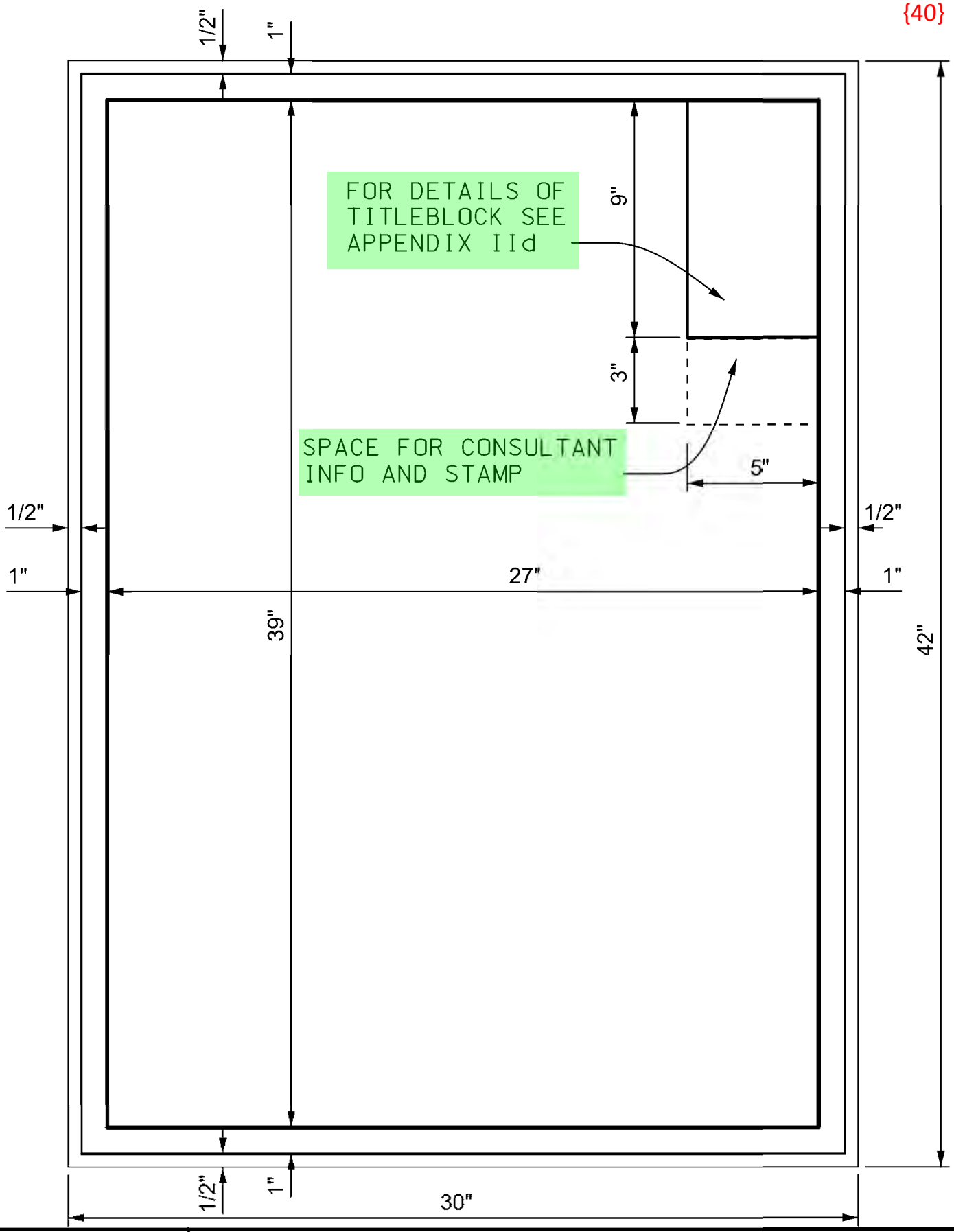

Philadelphia Water Department

APPENDIX IIb

Border Size - Sewer

{40}

Back to Appendix II

CHECKED BY: FM	DATE: 01/15/2014	PAGE NO. 1 OF 1

PHILADELPHIA WATER
EST. 1801

APPENDIX IIc
Title Block - Water

{7} {10} {94}
Back to Appendix II

NOTICE:

PURSUANT TO THE REQUIREMENTS OF PENNSYLVANIA ACT 121 OF 2008, THE CONTRACTOR SHALL CONTACT THE PENNSYLVANIA ONE CALL SYSTEM AT 1-800-242-1776 OR 811, AT LEAST 3 DAYS PRIOR TO EXCAVATION.

HIGHWAY DISTRICT NO. 3 WARD NO. 5

SURVEY DISTRICT NO. 2 WATER PLATE NO. 28A

ONE CALL SERIAL NO. 12345678 GPIS NO. G0000-00000

WATER MAIN RELAY PROJECT

MARKET STREET

FROM

2ND STREET TO 3RD STREET

APPROVED
CHIEF, DESIGN BRANCH, ENGINEERING DIVISION
(OR APPROPRIATE FIRM NAME)

APPROVED
GENERAL MANAGER, PLANNING AND ENGINEERING

APPROVED
WATER COMMISSIONER

LEAD SHEET ONLY

CITY OF PHILADELPHIA
WATER DEPARTMENT

SCALES:
PLAN 1" = 20'
AND AS NOTED

(TOTAL NUMBER OF SHEETS IN THE PROJECT)

WORK NO. S-40345-RD (5 SHEETS)

SHEET NO. W-1 OF 2 SHEETS

TOTAL NUMBER OF WATER SHEETS

DRAWN BY	
PROJECT ENGR.	
SUPERVISOR	DATE

CHECKED BY: FM | DATE: 01/15/2014 | PAGE NO. 1 OF 1

{7} {10} {94}

PHILADELPHIA WATER
EST. 1801

NOTICE:

PURSUANT TO THE REQUIREMENTS OF PENNSYLVANIA ACT 121 OF 2008,
THE CONTRACTOR SHALL CONTACT THE PENNSYLVANIA ONE CALL SYSTEM AT 1-800-242-1776 OR 811,
AT LEAST 3 DAYS PRIOR TO EXCAVATION.

HIGHWAY DISTRICT NO. 3 WARD NO. 5

SURVEY DISTRICT NO. 2 DRAINAGE PLAT NO. 31 OUTFALL NO. D53

ONE CALL SERIAL NO. 12345678 GPIS NO. G0000-00000

SEWER RECONSTRUCTION PROJECT

MARKET STREET

FROM

2ND STREET TO 3RD STREET

APPROVED
CHIEF, DESIGN BRANCH, ENGINEERING DIVISION
(OR APPROPRIATE FIRM NAME)

APPROVED
GENERAL MANAGER, PLANNING AND ENGINEERING

APPROVED
LEAD SHEET ONLY
WATER COMMISSIONER

CITY OF PHILADELPHIA
WATER DEPARTMENT

SCALES:

PLAN		1"= 20'
PROFILE	HORZ.	1"= 20'
	VERT.	1"= 5'

WORK NO. S-40345-RD (5 SHEETS)
(TOTAL NUMBER OF SHEETS IN THE PROJECT)

SHEET NO. S-1 OF 2 SHEETS
NUMBER OF SEWER SHEETS

DRAWN BY	
PROJECT ENGR.	
SUPERVISOR	DATE

APPENDIX IId
Title Block - Sewer

{41} {48}
Back to Appendix II

CHECKED BY: FM
DATE: 01/15/2014
PAGE NO. 1 OF 1

{41} {48}

{14} {36} {49} {66}

Houseline	0.80mm
Curbline	0.50mm
Right of Way	0.50mm
Confirmed Curb	0.25mm
Physical Curb	0.25mm
Edge of Paving	0.25mm
Ex. Water Line	0.25mm
Gas Line	0.25mm
Ex. Sewer Line	0.25mm
Verizon, PECo, SEPTA, Cable, Keystone, ATT, and Misc. Duct Lines	0.25mm
Railroad	0.25mm
Property Line	0.25mm
Proposed Water Main	0.70mm
Proposed Sewer	0.70mm
Proposed Water Main (on Sewer Sheet)	0.70mm
Proposed Sewer (on Water Sheet)	0.70mm
Ex. Separate System	0.25mm
Proposed Separate System	0.70mm
Profile Grid	0.20mm
Exist Sewer in Profile	0.50mm

Water, Sewer and Gas Lines (Existing and Proposed) 24" and Over are to be drawn Double-Line.
All Other utilities 42" and Over are to be drawn Double-Line

Philadelphia Water Department

APPENDIX IIe
Line Styles

{14} {36} {49} {66}

Back to Appendix II

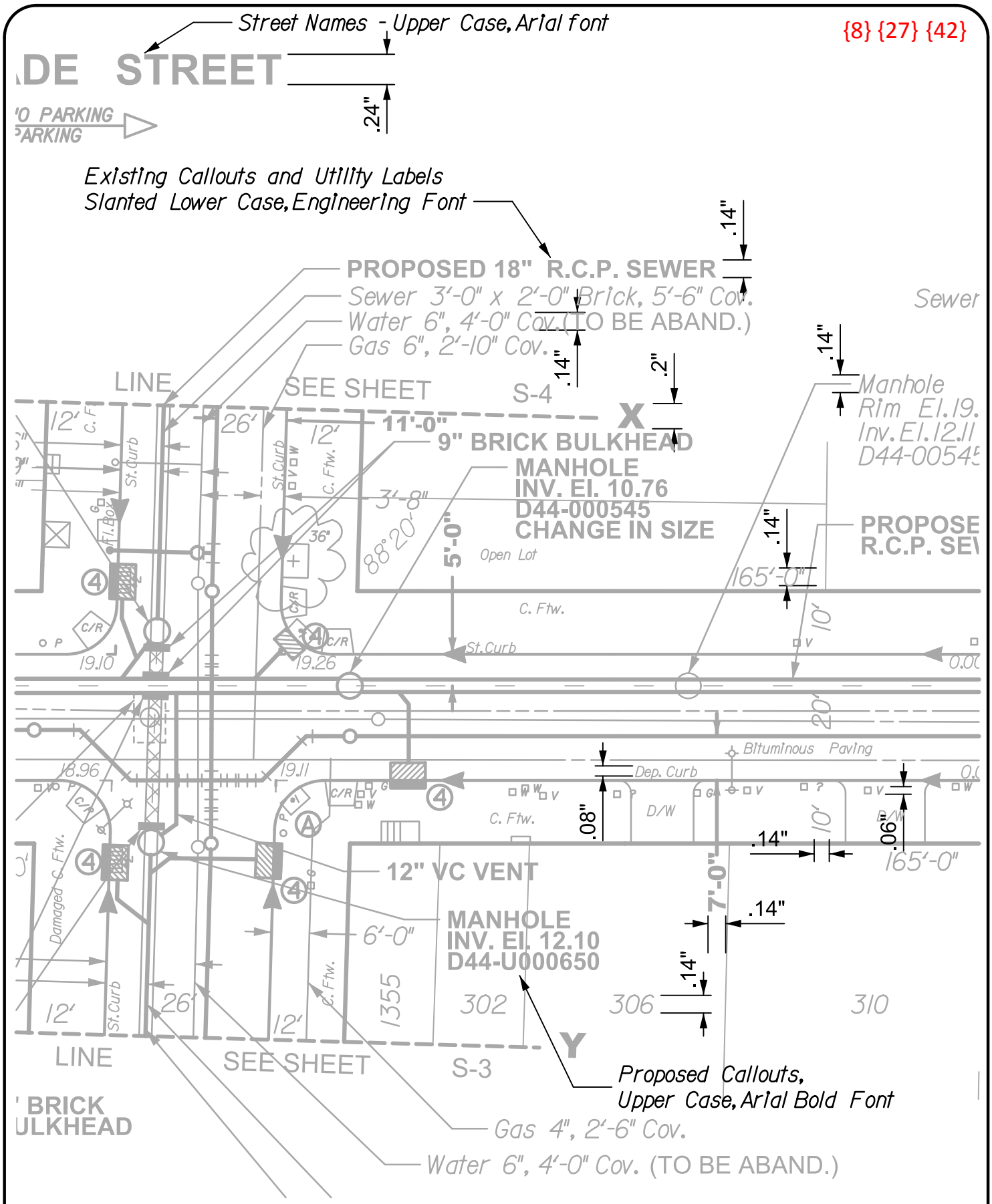

Philadelphia Water Department

APPENDIX IIf
Lettering

{8} {27} {42}

Back to Appendix II

CHECKED BY: FM	DATE: 01/15/2014	PAGE NO. 1 OF 1

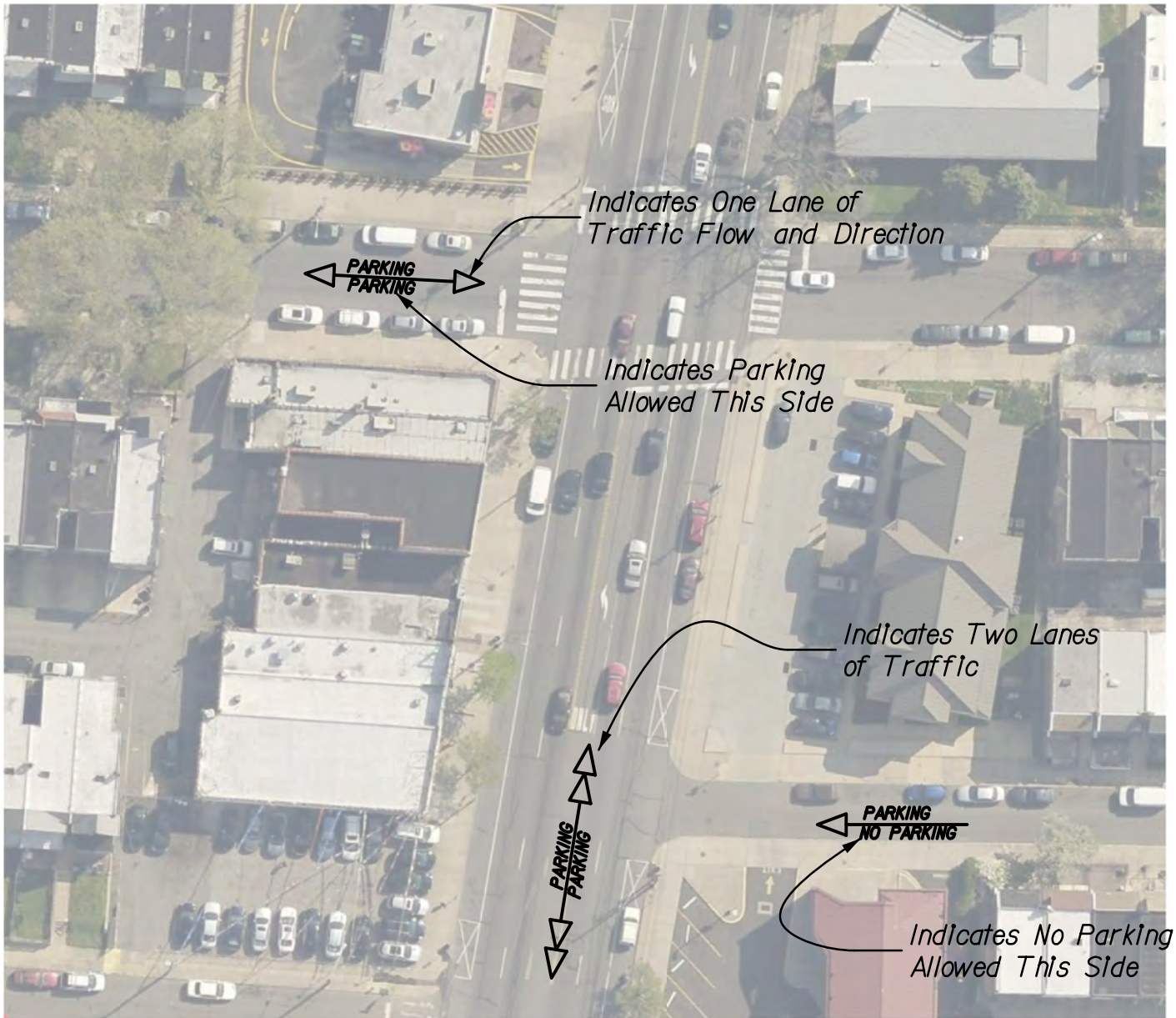

TRAFFIC FLOW ARROWS

Curb Flow Arrow -
Place on Curbs Lines
to indicate Stormwater Flow
In Gutter

CURB FLOW ARROW

NORTH ARROW

Philadelphia Water Department

APPENDIX IIg
Arrow Symbols

{24} {60}

Back to Appendix II

CHECKED BY: FM	DATE: 01/15/2014	PAGE NO. 1 OF 1

PROPOSED FITTINGS (AS THEY APPEAR ON THE WATER CONTRACT DRAWINGS)	PROPOSED FITTINGS (AS THEY APPEAR ON THE SEWER CONTRACT DRAWINGS)	EXISTING FITTINGS (AS THEY APPEAR ON THE WATER, SEWER AND GREEN CONTRACT DRAWINGS)	SYMBOL DESCRIPTION
●	●	○	HYDRANT
		NA	HYDRANT ANCHOR TEE
○	○	○	VALVE
		NA	CROSS
		NA	TEE
		NA	1/4 BEND(90°)
		NA	1/8 BEND(45°)
		NA	1/16 BEND(22.5°)
		NA	1/32 BEND(11.25°)
		NA	VERT. BENDS
◀	◀	◁	REDUCER
		NA	SLEEVE
			CAP
			PLUG
			OFFSET

Philadelphia Water Department

APPENDIX IIh

Symbols for Water Main Fittings

{34}

Back to Appendix II

CHECKED BY: FM	DATE: 01/15/2014	PAGE NO. 1 OF 2

PROPOSED FITTINGS (AS THEY APPEAR ON THE WATER CONTRACT DRAWINGS)	PROPOSED FITTINGS (AS THEY APPEAR ON THE SEWER CONTRACT DRAWINGS)	EXISTING FITTINGS (AS THEY APPEAR ON THE WATER, SEWER AND GREEN CONTRACT DRAWINGS)	SYMBOL DESCRIPTION
B.O.	B.O.	B.O.	BLOW OFF
A.V.	A.V.	A.V.	AIR VALVE
NA	NA		HIGH PRESSURE FIRE HYDRANT
NA	NA		HIGH PRESSURE FIRE VALVE AND CHAMBER
			DISTRICT BOUNDRY VALVE
NA	NA	T	ELECTROLYSIS TEST STATION
		NA	MECHANICAL COUPLING
			DOUBLE LINE FITTING 24" AND OVER

Philadelphia Water Department

APPENDIX IIh

Back to Appendix II

Symbols for Water Main Fittings

Philadelphia Water Department

APPENDIX III
Standard Water Notes

Back to Appendix II

NOTES:

1. REMOVE FRAME & COVER - SEE SPEC'S.
2. REMOVE FIRE HYDRANT - SEE SPEC'S.
3. REMOVE PIPE AND/OR FITTING & RECONNECT.
4. ROTATE FITTINGS AS REQUIRED.
5. REMOVE AND RETURN VALVE - SEE SPEC'S.

WHERE APPLICABLE

6. INDICATES LIMITS OF DISTURBANCE. DISTURBANCE OF HANDICAP RAMP IS PROHIBITED. SAW CUT JOINT(S) IF NEEDED TO MINIMIZE DISTURBANCE TO SIDEWALK. HYDRANT TO BE REMOVED TO A POINT 2 FEET BELOW SURFACE.
7. INDICATES LIMITS OF DISTURBANCE. DISTURBANCE OF HANDICAP RAMP IS PROHIBITED. SAW CUT JOINT(S) IF NEEDED TO MINIMIZE DISTURBANCE TO SIDEWALK. REMOVE FRAME AND COVER.

GENERAL NOTES:

- EXISTING WATER MAINS SHALL BE CUT & PLUGGED AS APPROVED BY THE CITY ENGINEER.
- THE CONTRACTOR SHALL MAINTAIN A MINIMUM 6-INCH CLEARANCE BETWEEN ALL UNDERGROUND STRUCTURES AND THE NEW WATER MAINS.
- BILLS OF MATERIAL AND PIPE TOTALS ARE FOR THE CONVENIENCE OF THE CONTRACTOR ONLY AND PAYMENT WILL BE MADE ONLY FOR THE ACTUAL AMOUNT OF PIPE AND APPURTENANCES INSTALLED.
- FIRE HYDRANTS SHALL NOT BE CONSTRUCTED OR RELOCATED UNTIL SUCH LOCATIONS HAVE BEEN APPROVED BY THE WATER DEPARTMENT CONSTRUCTION DIVISION IN THE FIELD.
- ALL DISTANCES SHOWN ARE IN DISTRICT STANDARD MEASUREMENT.

CHECKED BY: FM | DATE: 01/15/2014 | PAGE NO. 1 OF 1

Legend Items

{16} {25} {26}
{61} {62} {80}

V	Vent Box - Sewer
W	Water Curb Box
G	Gas Curb Box
?	Unknown Curb Box
P	Pole
LP	Lamp Post
	PECo Pole
	PECo Pole W/Light
SP	SEPTA Pole
TL	Traffic Light
TS	Traffic Sign
IP	Iron Pole
B	Bollard
PM	Parking Meter
K	Parking Kiosk
	StandPipe
CO	Clean Out
DS	Down Spout
MB	Mail Box
HH	Hand Hole
CATV	Cable Handhole
SS	Survey Stone
Traffic Control	Traffic Control Box(Above Ground)
Verizon	Verizon Junction Box(Above Ground)
	Sewer Manhole
	Water Valve
	Fire Hydrant
T	Electrolysis Test Station
	Open Mouth Grate Inlet
4CI	City Inlet (4 Denotes 4 FT. 6 Denotes 6 FT.)
*1	Old City Inlet (*1,*2,*3 or *4 Denotes Size)
*1	Old Grate Inlet (*1,*2,*3 or *4 Denotes Size)

G	Gas Valve
Door	Door Sill
?	Unknown Utility Manhole
	Utility Manhole
	Grating
	Cellar Door
	Steps
	Porch
Planter	Planter
Shelter	Bus Shelter
C/R	Curb Ramp
+ 12"	Tree/Trunk Size In "
10" Stump	Tree Stump/w Trunk In "
	Hedge
Trash	Trash Receptacle
	Fence
	Bike Rack
	Domed Riser
C. Curb	Concrete Curb
G. Curb	Granite Curb
Sl. Curb	Slate Curb
C. Ftw.	Concrete Footway
Br. Ftw.	Brick Footway
Sl. Ftw.	Slate Footway
Dep.Curb	Depressed Curb
Br. Gutter	Brick Gutter
D/W	Driveway
St.Wall	Stone Wall
Br.Wall	Brick Wall
C.Wall	Concrete Wall
S.R.E.	Sewer Return Elevation
S.R.L.	Sewer Return Location

Philadelphia Water Department

APPENDIX IIj
Legend

{16} {25} {26}
{61} {62} {80}

Back to Appendix II

CHECKED BY: FM | DATE: 01/15/2014 | PAGE NO. 1 OF 1

PROPOSED ITEMS (AS THEY APPEAR ON THE SEWER CONTRACT DRAWINGS)	PROPOSED ITEMS (AS THEY APPEAR ON THE WATER CONTRACT DRAWINGS)	EXISTING ITEMS (AS THEY APPEAR ON THE WATER, SEWER AND GREEN CONTRACT DRAWINGS)	SYMBOL DESCRIPTION
			MANHOLE
			WELLHOLE
			EXTERIOR DROP MANHOLE
			INTERIOR DROP MANHOLE
			SUMMIT MANHOLE
			TRANSITION MANHOLE
			CONCRETE COLLAR
		NA	9" BRICK BULKHEAD
4	4	4CI	4FT. CITY INLET
6	6	6CI	6FT. CITY INLET
4	4		4 FT. OPEN MOUTH GRATE INLET
6	6		6 FT. OPEN MOUTH GRATE INLET
4	4		4 FT. HIGHWAY GRATE INLET
6	6		6 FT. HIGHWAY GRATE INLET
NA	NA	2	OLD #1,2,3,4 GRATE INLETS
NA	NA	1	OLD #1,2,3,4 CITY INLETS
		NA	FLOWABLE FILL

Philadelphia Water Department

APPENDIX IIk

{37}

Back to Appendix II

Manholes, Inlets and Appurtenances

CHECKED BY: FM	DATE: 01/15/2014	PAGE NO. 1 OF 1

NOTES: (ONLY USE APPLICABLE NOTES)

ALL DISTANCES SHOWN ARE IN DISTRICT STANDARD MEASUREMENT. PAYMENT FOR ALL WORK WILL BE BASED UPON THAT STANDARD.

THE LOCATIONS AND ELEVATIONS OF THE EXISTING SEWERS ARE APPROXIMATE. THE ELEVATIONS OF THE EXISTING SEWER AT THE TERMINATING CONNECTION POINTS TO THE PROPOSED SEWER MUST BE FIELD CHECKED PRIOR TO CONSTRUCTING THE NEW SEWER.

THE THICKNESS OF THE ARCHES AND THE CHARACTER AND THE EXTENT OF THE CRADLES OF THE EXISTING SEWERS ARE UNKNOWN

SEAL OPEN ENDS OF SEWER WITH VITRIFIED PIPE STOPPERS AND OPEN ENDS OF STORMWATER CONDUITS WITH BRICK BULKHEADS.

REMOVE EXISTING PIPE STOPPERS AND BRICK BULKHEADS PRIOR TO CONNECTING TO EXISTING SEWERS OR STORMWATER CONDUITS.

(ASSESSIBLE PROJECTS ONLY)

REGISTERED PROPERTY OWNERS' NAMES AND ZONING CLASSIFICATIONS ARE CORRECT AS OF __/__/____ THE DATE THE SEWER BASE PLAN WAS APPROVED.

(A) DENOTES EXISTING INLET TO BE ABANDONED.

(R) DENOTES EXISTING INLET TO BE RECONNECTED.

(4) DENOTES 4 FT. CITY INLET.

(6) DENOTES 6 FT. CITY INLET.

(4) DENOTES 4 FT. OPEN MOUTH GRATE INLET.

(6) DENOTES 6 FT. OPEN MOUTH GRATE INLET.

(4) DENOTES 4 FT. HIGHWAY GRATE INLET.

(6) DENOTES 6 FT. HIGHWAY GRATE INLET.

Philadelphia Water Department

APPENDIX IIm

Standard Sewer Notes

{71}

Back to Appendix II

CHECKED BY: FM	DATE: 01/15/2014	PAGE NO. 1 OF 1

PROPOSED ITEMS (AS THEY APPEAR ON THE GSI CONTRACT DRAWINGS)	PROPOSED ITEMS (AS THEY APPEAR ON THE WATER AND SEWER CONTRACT DRAWINGS)	EXISTING ITEMS (AS THEY APPEAR ON THE WATER, SEWER AND GREEN CONTRACT DRAWINGS)	SYMBOL DESCRIPTION
G	G	G	4FT. GREEN CITY INLET
G	G	G	4 FT. GREEN HIGHWAY GRATE INLET
			STORMWATER TRENCH
			TREE PIT
		NA	ANTI-SEEP COLLAR
CO	CO	CO	CLEANOUT
			DOMED RISER
			OVERFLOW STRUCTURE
			OBSERVATION WELL
			GREEN SOLID PIPE
			GREEN PERFORATED PIPE

Philadelphia Water Department

APPENDIX IIn

Back to Appendix II

GREEN STORMWATER INFRASTRUCTURE (GSI) SYMBOLS

CHECKED BY: FM | DATE: 01/15/2014 | PAGE NO. 1 OF 1

FORMS AND CALCULATIONS

Appendix

III

{82} {89} {96}

a – Water Quantities Sheet*
b – Sewer Quantities Sheet*
c – Green Quantities Sheet*
d – GSI Preliminary Cost Estimate*
f – Final Design Package Checklist*
g – Contract Summary Sheet*
h – OEO post Award Compliance Form
i – Project Status Summary Sheet*
j – Quantity Verification Sheet*
*Link to file on phillywaterdesign.com

PWD	WATER RELAY QUANTITY SHEETS	PREPARED BY :		PROJECT # :		DATE :	

SELECT CELL FOR NOTES

LOCATION : | SHEET # :

DI PIPE		EXCAVATION IN CITY STREETS			EXCAVATION IN STATE ROUTES		
SIZE	L.F.	L.F.	FACTOR	C.Y.	L.F.	FACTOR	C.Y.
3"			0.29			0.29	
4"			0.29			0.29	
6"			0.29			0.29	
8"			0.39			0.39	
10"			0.44			0.44	
12"			0.49			0.49	
16"			0.59			0.59	
20"			0.70			0.70	
REMOVALS		#	FCT		#	FCT	
FIRE HYDRANT			2			2	
CUT-IN VALVE			1			1	
FRAME AND COVER			1			1	
		TOTAL CITY STREETS:	CY		TOTAL STATE ROUTES:	CY	

CITY 8" CONCRETE BASE			STATE 10" CONCRETE BASE			CITY PAVING			STATE ROUTE PAVING		
L.F.	FACTOR	S.Y.	L.F.	FACTOR	S.Y.	LF	FACTOR	S.Y.	L.F.	FACTOR	S.Y.
	0.33			0.39			0.44			0.39	
	0.33			0.39			0.44			0.39	
	0.33			0.39			0.44			0.39	
	0.39			0.44			0.50			0.44	
	0.41			0.46			0.52			0.46	
	0.43			0.48			0.54			0.48	
	0.46			0.52			0.57			0.52	
	0.56			0.56			0.67			0.56	
		SY			SY			SY			SY

CONCRETE FOOTWAY			TOPSOIL & SOD			CONCRETE DRIVEWAY			CURB		
LENGTH (L.F.)	WIDTH (L.F.)	S.Y.	LENGTH (L.F.)	WIDTH (L.F.)	S.Y.	LENGTH (L.F.)	WIDTH (L.F.)	S.Y.	CONCRETE	LF	
									GRANITE	LF	
									ADA RAMP		
										EACH	
									MILLING		
		SY			SY			SY		SY	

QUANTIFY CURB CUTBACKS

PAVING AT INTERSECTIONS				
PIPE SIZE	L.F.	FACTOR	S.Y.	TON

TEMPORARY PAVING				
PIPE SIZE	LENGTH (L.F.)	FACTOR	S.Y.	TON
				TON

BILL OF MATERIALS					
FITTING	QUANTITY	UNIT WEIGHT	TOTAL	ANC. VOL	TOTAL
Fire Hydrants				1.20	
TOTALS			TON		CY

VALVES			
SIZE	QUANTITY	SIZE	QUANTITY
3"		12"	
4"		16"	
6"		20"	
8"			
10"			

FULL WIDTH RECONSTRUCTION - CITY STANDARD PAVING			
6" SUBBASE (SY)			
8" C. BASE (SY)			
CITY PAVING (SY)			
CONCRETE FTW (SY)			
CURB (LF)			
	TOTAL S.Y.	WATER	SEWER

FULL WIDTH RECONSTRUCTION - POROUS PAVING			
BINDER COURSE (SY)			
WEARING COURSE (SY)			
	TOTAL S.Y.	WATER	SEWER
CHOKER COURSE (CY)			
	TOTAL C.Y.	WATER	SEWER

Fitting	Size	Unit Weight	Horizontal	Top	Bottom
Crosses	8x8	108			
	12x8	158			
	12x12	214			
Tees	8x4	60	0.10		
	8x6	72	0.10		
	8x8	86	0.20		
	12x4	94	0.10		
	12x8	125	0.20		
	12x12	160	0.40		
	8x6 H.A.T.	79	0.10		
	12x6 H.A.T.	129	0.10		
1/4 Bends (90°)	6"	43	0.10		
	8"	64	0.20		
	12"	122	0.30		
1/8 Bends (45°)	3"	21	0.06	0.65	0.02
	4"	36	0.06	0.65	0.02
	6"	32	0.06	0.65	0.02
	8"	50	0.07	1.47	0.04
	12"	101	0.15	2.80	0.07
1/16 Bends (22.5°)	6"	34	0.03	0.40	0.02
	8"	46	0.05	0.55	0.04
	12"	84	0.10	1.38	0.07
Offsets	8x6	177	0.14		
	8x12	231	0.14		
	8x18	287	0.14		
	12x12	420	0.15		
Reducers	4x3	18			
	8x6	39			
	10x8	54			
	12x6	64			
	12x8	60			
Sleeves	3"	16			
	4"	18			
	6"	28			
	8"	38			
	12"	66			
Caps	16"	155	0.80		
	24"	345	1.70		
	36"	850	5.20		

NEW SERVICES				
SIZE	QUANTITY	SIDE	LENGTH	TOTAL PIPE
3/4"				
3/4"				
3/4"				
3/4"				
3/4"				
3/4"				
3/4"				
3/4"				
3/4"				
3/4"				
1"				
1"				
1"				
1"				
1-1/2"				
1-1/2"				
1-1/2"				
1-1/2"				
2"				
2"				
2"				
2"				
2"				

3/4" LEAD SERVICES REPLACEMENT			
ESTIMATED PERCENTAGE OF HOMES			15%
QUANTITY	SIDE	LENGTH (L.F.)	TOTAL PIPE
	EACH	LF	

MATERIAL LIST ORDER		
1. Hydrants (W/ CCL)	5. Tees	9. Sleeves
2. Valve Boxes	6. Bends	10. Caps
3. Valves	7. Offsets	11. Plugs
4. Crosses	8. Reducers	

MISCELLANEOUS									

PWD	SEWER RECONSTRUCTION / LINING QUANTITY SHEETS	PREPARED BY :		PROJECT # :		DATE :	

SELECT CELL FOR NOTES

LOCATION :		SHEET # :	

CITY STREET

R.C. PIPE

PIPE SIZE	INV. DEPTH (L.F.) UP- STREAM	INV. DEPTH (L.F.) DOWN- STREAM	AVG. DEPTH (L.F.)	ADDL. DEPTH (L.F.)	TRENCH DEPTH (L.F.)	TRENCH WIDTH (L.F.)	PIPE LENGTH (L.F.)	EXCAVATION (C.Y.)	S&S DEPTH (F.T.)	S&S FACTOR .0056/.0084 <7'/>=7'	S&S (MFBM)
18"				0.54		3.00					
21"				0.56		3.25					
24"				0.58		3.50					
27"				0.60		3.75					
30"				0.63		4.08					
36"				0.67		4.67					
42"				0.71		5.33					
48"				0.79		6.00					
54"				0.88		6.67					
60"				0.96		7.17					

CITY 8" CONCRETE BASE

PIPE LENGTH (L.F.)	BASE WIDTH (L.F.)	FACTOR	TOTAL (S.Y.)
	5.00	0.556	
	5.25	0.583	
	5.50	0.611	
	5.75	0.639	
	6.08	0.676	
	6.67	0.741	
	7.33	0.814	
	8.00	0.889	
	8.67	0.963	
	9.17	1.019	

CITY PAVING

PIPE LENGTH (L.F.)	SURFACE WIDTH (L.F.)	FACTOR	TOTAL (S.Y.)
	6.00	0.667	
	6.25	0.694	
	6.50	0.722	
	6.75	0.750	
	7.08	0.787	
	7.67	0.852	
	8.33	0.926	
	9.00	1.000	
	9.67	1.074	
	10.17	1.130	

V.C. PIPE

PIPE SIZE	INV. DEPTH (L.F.) UP- STREAM	INV. DEPTH (L.F.) DOWN- STREAM	AVG. DEPTH (L.F.)	ADDL. DEPTH (L.F.)	TRENCH DEPTH (L.F.)	TRENCH WIDTH (L.F.)	PIPE LENGTH (L.F.)	EXCAVATION (C.Y.)	S&S DEPTH (F.T.)	S&S FACTOR .0056/.0084 <7'/>=7'	S&S (MFBM)
10" vent						2.00					
12" vent						2.20					
15" lateral						2.50					

CITY 8" CONCRETE BASE

PIPE LENGTH (L.F.)	BASE WIDTH (L.F.)	FACTOR	TOTAL (S.Y.)
	3.50	0.389	
	3.70	0.411	
	4.00	0.444	

CITY PAVING

PIPE LENGTH (L.F.)	SURFACE WIDTH (L.F.)	FACTOR	TOTAL (S.Y.)
	4.50	0.500	
	5.00	0.556	

FLOWABLE FILL

SEWER SIZE	LENGTH (L.F.)	VOID FACTOR	TOTAL FILL (C.Y.)
		CY	

VOIDS

SEWER SIZE	LENGTH (L.F.)	VOID FACTOR	TOTAL VOID (C.Y.)
	EXCAVATION: CY	S&S: MFBM	

SY

PAVING AT INTERSECTIONS

PIPE SIZE	PIPE LENGTH (L.F.)	FACTOR	TOTAL (S.Y.)	TOTAL (TON)
			SY	TON

STATE ROUTE

R.C. PIPE

PIPE SIZE	INV. DEPTH (L.F.) UP- STREAM	INV. DEPTH (L.F.) DOWN- STREAM	AVG. DEPTH (L.F.)	ADDL. DEPTH (L.F.)	TRENCH DEPTH (L.F.)	TRENCH WIDTH (L.F.)	PIPE LENGTH (L.F.)	EXCAVATION (C.Y.)	S&S DEPTH (F.T.)	S&S FACTOR .0056/.0084 <7'/>=7'	S&S (MFBM)
18"				0.54		3.00					
21"				0.56		3.25					
24"				0.58		3.50					
27"				0.60		3.75					
30"				0.63		4.08					
36"				0.67		4.67					
42"				0.71		5.33					
48"				0.79		6.00					
54"				0.88		6.67					
60"				0.96		7.17					

STATE 10" CONCRETE BASE

PIPE LENGTH (L.F.)	BASE WIDTH (L.F.)	FACTOR	TOTAL (S.Y.)
	5.00	0.556	
	5.25	0.583	
	5.50	0.611	
	5.75	0.639	
	6.08	0.676	
	6.67	0.741	
	7.33	0.814	
	8.00	0.889	
	8.67	0.963	
	9.17	1.019	

STATE ROUTE PAVING

PIPE LENGTH (L.F.)	SURFACE WIDTH (L.F.)	FACTOR	TOTAL (S.Y.)
	5.00	0.556	
	5.25	0.583	
	5.50	0.611	
	5.75	0.639	
	6.08	0.676	
	6.67	0.741	
	7.33	0.814	
	8.00	0.889	
	8.67	0.963	
	9.17	1.019	

V.C. PIPE

PIPE SIZE	INV. DEPTH (L.F.) UP- STREAM	INV. DEPTH (L.F.) DOWN- STREAM	AVG. DEPTH (L.F.)	ADDL. DEPTH (L.F.)	TRENCH DEPTH (L.F.)	TRENCH WIDTH (L.F.)	PIPE LENGTH (L.F.)	EXCAVATION (C.Y.)	S&S DEPTH (F.T.)	S&S FACTOR .0056/.0084 <7'/>=7'	S&S (MFBM)
10" vent						2.00					
12" vent						2.20					
15" lateral						2.50					

STATE 10" CONCRETE BASE

PIPE LENGTH (L.F.)	BASE WIDTH (L.F.)	FACTOR	TOTAL (S.Y.)
	4.00	0.444	
	4.20	0.467	
	4.50	0.500	

STATE ROUTE PAVING

PIPE LENGTH (L.F.)	SURFACE WIDTH (L.F.)	FACTOR	TOTAL (S.Y.)
	4.00	0.444	
	4.20	0.467	
	4.50	0.500	

FLOWABLE FILL

SEWER SIZE	LENGTH (L.F.)	VOID FACTOR	TOTAL FILL (C.Y.)
		CY	

VOIDS

SEWER SIZE	LENGTH (L.F.)	VOID FACTOR	TOTAL VOID (C.Y.)
	EXCAVATION: CY	S&S: MFBM	

SY

TEMPORARY PAVING

PIPE SIZE	L.F.	FACTOR	TON
		TON	

SY

PAVING AT INTERSECTIONS

PIPE SIZE	L.F.	FACTOR	S.Y.
TON		SY	

FULL WIDTH RECONSTRUCTION - CITY STANDARD PAVING

6" SUBBASE (SY)			
8" C. BASE (SY)			
CITY PAVING (SY)			
CONCRETE FTW (SY)			
CURB (LF)			
	TOTAL S.Y.	WATER	SEWER

FULL WIDTH RECONSTRUCTION - POROUS PAVING

BINDER COURSE (SY)			
WEARING COURSE (SY)			
	TOTAL S.Y.	WATER	SEWER
CHOKER COURSE (CY)			
	TOTAL C.Y.	WATER	SEWER

SEWER LINING

	SIZE	MATERIAL	LF
Lining of			
Lining of			
Lining of			
Lining of			
Lining of			

MANHOLE REHABILITATION

	EACH

CONCRETE FOOTWAY

LENGTH (L.F.)	WIDTH (L.F.)	S.Y.
	SY	

TOPSOIL & SOD

LENGTH (L.F.)	WIDTH (L.F.)	S.Y.
	SY	

CONCRETE DRIVEWAY

LENGTH (L.F.)	WIDTH (L.F.)	S.Y.
	SY	

CURB

CONCRETE	LF
GRANITE	LF
ADA RAMP	
EACH	
MILLING	
SY	

QUANTIFY CURB CUTBACKS

MISCELLANEOUS

LATERALS

6" VCP LATERAL RECONNECTION			LATERAL REPLACEMENT WITH 6" DUCTILE IRON PIPE					
			DIP			DIP RISERS IN CONCRETE		
#	LENGTH	TOTAL	#	LENGTH	TOTAL	# RISERS	V. LENGTH	TOTAL
	LF			LF			VF	

MANHOLES

TYPE	QTY.
FOR PIPES 30" & UNDER	
FOR PIPES 36" & OVER	
TRANSIT. FOR 30" & UNDER	
TRANSIT. FOR 36" & OVER	
JUNCTION	
6' JUNCTION MANHOLE	
WELLHOLE	

INLETS

TYPE	QTY.
4' OMG	
6' OMG	
4' CITY	
6' CITY	
4' HIGHWAY	
6' HIGHWAY	
ABANDON INLET	

PWD	GREEN INFRASTRUCTURE QUANTITY SHEETS	PREPARED BY :		PROJECT # :		DATE :	

SELECT CELL FOR NOTES

LOCATION :		SHEET # :		SYSTEM TYPE :		SYSTEM ID :	

SW TRENCH EXCAVATION				EXCAVATION FOR PIPE					SW TRENCH SAND FILTER LAYER				SW TRENCH #57 STONE STORAGE				SW TRENCH BACKFILL			
LENGTH (L.F.)	WIDTH (L.F.)	DEPTH (L.F.)	C.Y.	PIPE SIZE & MATERIAL	LENGTH (L.F.)	WIDTH (L.F.)	DEPTH (L.F.)	C.Y.	LENGTH (L.F.)	WIDTH (L.F.)	DEPTH (L.F.)	C.Y.	LENGTH (L.F.)	WIDTH (L.F.)	DEPTH (L.F.)	C.Y.	LENGTH (L.F.)	WIDTH (L.F.)	DEPTH (L.F.)	C.Y.
									TREE PIT WITHIN SYSTEM VOLUME				PIPE WITHIN SYSTEM VOLUME							
													MODULAR TANKS VOLUME							
													TREE PIT WITHIN SYSTEM VOLUME							
		CY					CY				CY				CY				CY	

CITY 8" CONCRETE BASE			STATE 10" CONCRETE BASE			CITY PAVING			STATE ROUTE PAVING		
LENGTH (L.F.)	WIDTH (L.F.)	S.Y.	LENGTH (L.F.)	WIDTH (L.F.)	S.Y.	LENGTH (L.F.)	WIDTH (L.F.)	S.Y.	LENGTH (L.F.)	WIDTH (L.F.)	S.Y.
		SY			SY			SY			SY

PAVING AT INTERSECTIONS				TEMPORARY PAVING			
LENGTH (L.F.)	WIDTH (L.F.)	S.Y.	TON	LENGTH (L.F.)	WIDTH (L.F.)	S.Y.	TON
							TON

PAVING LIMITS FOR SW TRENCH SYSTEMS IN PAVING LETTER SUPERSEDE DIRECTION IN CELL NOTES

CONCRETE FOOTWAY			SODDING			CONCRETE DRIVEWAY		
LENGTH (L.F.)	WIDTH (L.F.)	S.Y.	LENGTH (L.F.)	WIDTH (L.F.)	S.Y.	LENGTH (L.F.)	WIDTH (L.F.)	S.Y.
		SY			SY			SY

CURB		
CONCRETE	LF	
GRANITE	LF	
ADA RAMP		
	EACH	
MILLING		
	SY	
FULL WIDTH 6" SUBBASE / 8" C. BASE		
	SY	

QUANTIFY CURB CUTBACKS

OBSERVATION WELL	INFILTRATION TEST	ANTI-SEEP COLLARS	UTILITY SLEEVE
EACH	EACH	EACH	LF

MODULAR STORAGE UNITS		
	LUMP SUM	

LANDSCAPING					
GENERAL CONSTRUCTION CONTRACT			SEPARATE LANDSCAPING CONTRACT		
REMOVAL OF EXISTING TREES		EACH	MULCH		CY
PLANTING SOIL (TREES)		CY	TREE PLANTING		EACH

INLETS / STRUCTURES	
TYPE	EACH
JUNCTION BOX	
WATER LEVEL CONTROL STRUCTURE	
4' GREEN CITY	
4' GREEN HIGHWAY	
ABANDONED INLETS	
6' GREEN DUAL CATCH BASIN CITY	
6' GREEN DUAL CATCH BASIN HWY	
4' OMG WITH ORIFICE	
4' CITY WITH ORIFICE	
4' HIGHWAY WITH ORIFICE	
CONNECTION TO EXISTING	

PIPES (L.F.)								
8" SOLID HDPE	8" PERF. HDPE	12" SOLID HDPE	12" PERF. HDPE	12" SOLID PP	12" PERF. PP	8" DI	10" DI	15" VCP

MISCELLANEOUS						

POROUS PAVING																
	BAY 1	BAY 2	BAY 3	BAY 4	BAY 5	BAY 6	BAY 7	BAY 8	BAY 9	BAY 10	BAY 11	BAY 12	BAY 13	BAY 14	C.Y.	CHECK DAM
EXCAVATION																
#57 STONE STORAGE																EACH

PWD	GREEN INFRASTRUCTURE PRELIMINARY ESTIMATE	PROPOSED SW TRENCH #		Trench Construction Cost per Drainage Area Acre	$0.00	Trench Construction Cost per Greened Acre	$0.00

scroll over for cost breakdown

SYSTEM DRAINAGE AREA (S.F.)	

SYSTEM FOOTPRINT (S.F.)	
DEPTH OF RUNOFF MANAGED (IN)	

Item Description	Item #	Approx. Quantity	Average Unit Cost	Unit	Total
Excavation and Earthwork					
Excavation and disposal for green infrastructure work including sheathing and shoring (without classification)	G1001	0	$59.00	CY	$0.00
Tree removal	G9102	0	$800.00	Each	$0.00
Piping					
HDPE anti-seep collars	G3000	0	$690.00	Each	$0.00
8 inch solid HDPE pipe	G3008	0	$75.00	LF	$0.00
8 inch perforated HDPE pipe	G3009	0	$75.00	LF	$0.00
12 inch solid PP pipe	G3112	0	$60.00	LF	$0.00
12 inch perforated PP pipe	G3113	0	$60.00	LF	$0.00
8 inch DI pipe	G3708	0	$100.00	LF	$0.00
Storage Media					
Furnish and place AASHTO #57 stone wrapped in geotextile/impermeatble liner	G4057	0	$90.00	CY	$0.00
Furnish and place sand filter layer	G4100	0	$80.00	CY	$0.00
Modular Storage Units	G4200	$ -		Lump Sum	$0.00
Drainage Structures					
15 inch Inlet connections	G7215 or S7215	0	$200.00	LF	$0.00
Junion Box	G8055	0	$8,000.00	Each	$0.00
Water Level Control Structure	G8056	0	$10,000.00	Each	$0.00
4 foot green city inlet	G8104	0	$8,000.00	Each	$0.00
4 foot green highway grate inlet	G8106	0	$7,900.00	Each	$0.00
Filling abandoned inlets	G8112	0	$740.00	Each	$0.00
~~6 foot green dual catch basin city inlet~~	~~G8124~~	~~0~~	~~$10,800.00~~	~~Each~~	~~$0.00~~
~~6 foot green dual catch basin highway grate inlet~~	~~G8125~~	~~0~~	~~$9,210.00~~	~~Each~~	~~$0.00~~
4 foot OMG inlet with orifice	G8150 or S8150	0	$7,400.00	Each	$0.00
4 foot city inlet with orifice	G8154 or S8154	0	$8,000.00	Each	$0.00
4 foot highway grate inlet with orifice	G8156 or S8156	0	$7,300.00	Each	$0.00
Underdrain connection to existing inlet	G8159	0	$1,000.00	Each	$0.00
Geotechnical Testing and Monitoring					
Double-ring infiltrometer tests	G1500	0	$1,300.00	Each	$0.00
Observation well	G8215	0	$1,360.00	Each	$0.00
Paving					
Concrete curb	G9000	0	$50.00	LF	$0.00
Reset stone curb	G9002	0	$60.00	LF	$0.00
Concrete footway paving	G9003	0	$95.00	SY	$0.00
Concrete driveway paving, 8in depth	G9009	0	$100.00	SY	$0.00
Plain cement concrete base course, 8 inch depth (including subgrading)	G9400	0	$85.00	SY	$0.00
High early strength concrete base course, 10 inch depth, (including subgrading)	G9402	0	$110.00	SY	$0.00
Superpave 64-22 PG, Type A, (1-1/2 inch binder course and 1-1/2 inch wearing course)	G9447	0	$34.00	SY	$0.00
Allowance for PennDOT inspection fees for paving in state routes	G9498	0		Allowance	$0.00
Construction and as-built of ADA ramps	G9511	0	$6,510.00	Each	$0.00
Site Work					
Maintenance and protection of traffic during work	G9500	0	$5,000.00	Lump Sum	$0.00
As-built survey and drafting	G9705	0	$2,000.00	Lump Sum	$0.00
Landscaping and Vegetation / Backfill					
Sodding	G9302	0	$20.00	SY	$0.00
Mulch	G9304	0	$90.00	CY	$0.00
Trees, 2-2.5 inch cal, B&B	G9307	0	$650.00	Each	$0.00
Planting Soil	G9310	0	$85.00	CY	$0.00
Backfill, 2A	G4002	0	$50.00	CY	$0.00
				Total	$0.00

EXCAVATION

SYSTEM ELEVATION CHANGE (LF)	TOTAL (CY)
	0
	0

EXCAVATION FOR PIPE

PIPE	LENGTH (LF)	TRENCH WIDTH (LF)	DEPTH (LF)	TOTAL (CY)
8" DIP		2.0		0.00
8" DIP		2.0		0.00
				0.00
				0.00
15" VCP		2.5		0.00
				0

ANTI-SEEP COLLAR / BOOT COLLAR (EA)	8" SOLID HDPE PIPE (LF)	8" PERFOR. HDPE PIPE (LF)	12" SOLID PP PIPE(LF)	12" PERF. PP PIPE(LF)	8"DUCTILE IRON PIPE (LF)
0	0	0	0	0	0

STONE STORAGE

DEPTH (LF)	TOTAL (CY)
	0
Pipe/Modular Units Volume in Stone	
	0

SAND

DEPTH (LF)	TOTAL (CY)
	0
	0

SYSTEM BACKFILL

SYSTEM ELEVATION CHANGE (LF)	TOTAL (CY)
0	0
	0

MODULAR STORAGE UNITS

	Lump Sum

INLETS

TYPE	QTY (EA)
JUNCTION BOX	
WATER LEVEL CONTROL STRUCTURE	
4' GREEN CITY	
4' GREEN HWY	
ABANDONED AND FILL	
~~6' GREEN DUAL CATCH BASIN CITY~~	
~~6' GREEN DUAL CATCH BASIN HWY~~	
4' OMG WITH ORIFICE	
4' CITY WITH ORIFICE	
4' HWY WITH ORIFICE	
CONNECTION TO EXIST.	

GEOTECH & MONITORING

ITEM	QTY (EA)
INFILTRATION TEST	
OBSERVATION WELL	

LANDSCAPING

ITEM	QTY (EA / CY)
TREE REMOVAL	
TREE PLANTING	
PLANTING SOIL	
MULCH	

SEED AND SOD

LENGTH (LF)	WIDTH (LF)	TOTAL (SY)
		0
		0

CONCRETE CURB (LF)	GRANITE CURB (LF)
0	0

CONCRETE FOOTWAY

LENGTH (LF)	WIDTH (LF)	TOTAL (SY)
		0
		0

CONCRETE DRIVEWAY

LENGTH (LF)	WIDTH (LF)	TOTAL (SY)
		0
		0
		0

ADA RAMP (EA.)
0

8" CONCRETE BASE

	LENGTH (LF)	WIDTH (LF)	TOTAL (SY)
Trench			0
8" DIP		3.5	0
15" VCP		4.0	0
Cutbacks			0
			0
			0

PAVING

LENGTH (LF)	WIDTH (LF)	TOTAL (SY)
		0
	4.5	0
	5.0	0
		0
		0
		0

10" CONCRETE BASE

LENGTH (LF)	WIDTH (LF)	TOTAL (SY)
		0
	4	0
	4.5	0
		0
		0
		0

IF STATE ROUTE, FILL OUT BELOW

ALLOWANCE FOR PENNDOT INSPECTION			
Qty.	NO. OF DAYS	$ PER DAY	ALLOWANCE
	10	$ 240.00	$ -
			$0.00

Additional Items & Notes:

Appendix IIId: GSI Preliminary Cost Estimate - Page 1 of 1 Back to Appendix III

PHILADELPHIA WATER DEPARTMENT
DESIGN BRANCH

Final Design Package Checklist

Note: This form must accompany final design package.

PWD Work Number and Project Description:	Date:		
Information required for final submittal	**Provided**		
	Yes	**No**	**N/A**
• Memo or e-mail from Design Supervisor approving final plans & specs	☐	☐	☐
• 1 set of mylar drawings (signed & rolled)	☐	☐	☐
• 1 copy of PGW response letter	☐	☐	☐
• 1 copy of Philadelphia Streets Department paving letter	☐	☐	☐
• GPIS forms completed on web application, see PWD Project Engineer for procedure	☐	☐	☐
Electronic Submittals on CD or DVD:			
• Specifications in Microsoft Word format	☐	☐	☐
• Design Drawings in AutoCAD or Micro-Station format	☐	☐	☐
• Design Drawings in PDF format	☐	☐	☐
• Engineer's Estimate of Construction Cost and PWD's Water, Sewer, and Green Quantities Spreadsheets (as needed) in Microsoft Excel format	☐	☐	☐
• 1 copy of each utility response letter in PDF format	☐	☐	☐
• PWD GSI Design Report as a single PDF. Additionally, supporting files in the formats below shall be provided as separate attachments o Written Report documenting design approach and assumptions (.PDF) o GreenIT Data Entry Application Metrics Report (.CSV, .PDF) o "Shared" GreenIT Data Entry Application Project(s) with PWD Project Engineer o Supporting design calculations and modeling files (XLSX and modeling original files) o Drainage area maps (.PDF and .DWG)	☐	☐	☐
• Approved Roadway Grading Plans in PDF format	☐	☐	☐
• Approved Curb Ramp Designs in PDF format	☐	☐	☐
• Quantities Certification in PDF format	☐	☐	☐
• Project Summary in Microsoft Word and PDF format	☐	☐	☐

PWD Design Branch
Monthly Project Contract Summary Sheet

Consultant: PWD Consulting
PWD Work Order No. P-16xx
Contract No. 12-202xx
Contract Expiration Date: 30-Sep-13
Contract Amount: $1,000,000
Amount Encumbered: $300,000
Amount Invoiced: $200,000
Unbilled Amount Remaining: $800,000

Date: May 31, 2013

						Contract P-16xx Summary							
Work No.	**Project Description**	**Total Design Budget (All Contracts)**	**Construction Estimate**	**% Des/Con**	**Amount Invoiced (P-15xx)**	**Design Budget (P-16xx)**	**Amount Invoiced (To Date)**	**MBE Payments (To Date)**	**WBE Payments (To Date)**	**Invoice No.**	**Invoice Date**	**Invoice Amount**	**% Invoiced (To Date)**
S-XXXXX-R	A Street	$200,000.00	$2,000,000.00	10%	$100,000.00	$100,000.00	$50,000.00	$7,500.00	$5,000.00	No. 1	1/31/2013	$25,000.00	50%
										No. 2	2/28/2013	$25,000.00	
S-XXXXX-R	B Street	$150,000.00	$1,500,000.00	10%	$50,000.00	$100,000.00	$100,000.00	$15,000.00	$10,000.00	No. 1	1/31/2013	$25,000.00	100%
										No. 2	2/28/2013	$25,000.00	
										No. 3	3/31/2013	$25,000.00	
										No. 4	4/30/2013	$25,000.00	
S-XXXXX-R	C Street	$100,000.00	$1,000,000.00	10%	$0.00	$100,000.00	$50,000.00	$7,500.00	$5,000.00	No. 1	1/31/2013	$25,000.00	50%
										No. 2	2/28/2013	$25,000.00	
					Totals	**$300,000.00**	**$200,000.00**	**$30,000.00**	**$20,000.00**				

SAMPLE

Back to Appendix III

CITY OF PHILADELPHIA
OFFICE OF ECONOMIC OPPORTUNITY
INSTRUCTIONS FOR THE POST AWARD COMPLIANCE REVIEW FORM
FOR MINORITY, WOMEN, AND DISABLED BUSINESS ENTERPRISES

The purpose of this form is to provide the City of Philadelphia, and the Office of Economic Opportunity with a monthly update on the activities and expenditures between the prime contractors and their subcontractors including:
Minority, Women, and Disabled Business Enterprises (M/W/DSBEs).

This form will be provided to the Prime contractor at the beginning of each contract and must be included with each invoice submittal and for each sub-contractor, supplier, or consultant identified as a participant on each contract. It is the responsibility of the prime contractor/vendor to keep accurate and up-to-date documentation of all invoice submittals by their subcontractors, and all payments to these subcontractors.

The Form:

Date, bid number, bid opening date, project name, contract number, contract amount (base bid only) are self-explanatory.

Commitments To:

M, W, and DS are as per your solicitation and commitment form submitted with your bid e.g., percentage of base and actual dollar amount of your commitment, which ever is greater.

Prime Contractor:

☐Name, address, phone number, and contract person are self-explanatory.

Subcontractor name:

☐ A separate form must be prepared for each certified vendor for each monthly invoice on a given contract.

COMPLIANCE REVIEW FORM

Check the Appropriate Selection:

☐ M, W, or DS. Then put the complete address, phone number and contact person of the subvendor.

Type of Service or Purchase:

☐ Specify scope of work and/or materials and supplies to be provided by the subvendor.

Payments to Firm:

☐ Invoices from the subvendor to the prime contractor must reference this project only. Payments from the prime to the subvendor must reference the project only, e.g., one invoice, one check. Fill in the ____ information in the appropriate box for that month.

Only indicate a payment(s) in the month that the check is actually written and given, to the subvendor. Note: These reports are cumulative.

Example:

A subvendor invoices you for work done on January 19, 2000. The City pays the prime contractor on March 19, 2000. Five calendar days after the prime has been paid, the subvendor should be issued a check for the work completed in January, 2000.

Estimate total (service or purchase) subcontract value is the total of payments to date.
For example, work was performed and invoiced on January 19, 2000, payment is made in March, 2000, then February, 2000, work is invoiced and paid in April, 2000. Post Award Compliance Review for May, will indicate the March and April 2000, payments. June's report will indicate the sum of March, April and May payments.

All Post Award Compliance Review forms are to be submitted no later than ten (10) calendar days after the billing period to the City.

OFFICE OF ECONOMIC OPPORTUNITY
POST AWARD COMPLIANCE REVIEW
FOR M/W/DSBE PARTICIPATION ON
CITY OF PHILADELPHIA BIDS AND CONTRACTS

DATE:__/___/_____	BID#	BID OPENING DATE:	REPORT NO. _____ (i.e. 1,2 or 3)
PROJECT NAME:		CONTRACT#	CONTRACT AMOUNT
COMMITMENT TO MBE	COMMITMENT TO WBE	COMMITMENT TO DSBE	
PRIME CONTRACTOR NAME:			DATE WORK BEGINS __/__/____
ADDRESS:			
PHONE#		CONTACT:	
SUBCONTRACTOR NAME:			DATE WORK COMPLETED
			____/___ /_____
MBE_____	WBE_____	DSBE_____	(PLEASE SPECIFY)
ADDRESS:			
PHONE#		CONTACT:	
SCOPE OF WORK:			

M/Y	PAYMENTS TO FIRM	% OF TOTAL PAYMENT	Year to Date Amount Paid
JAN	$	%	
FEB	$	%	
MAR	$	%	
APR	$	%	
MAY	$	%	
JUN	$	%	
JUL	$	%	
AUG	$	%	
SEP	$	%	
OCT	$	%	
NOV	$	%	
DEC	$	%	
ESTIMATE TOTAL (SERVICE OR PURCHASE) SUBCONTRACT VALUE IS:		$ _____	

Attach copies of:
1. Invoices, 2. Cancelled checks, 3. Copy of PO
Use one sheet per subcontractor (copy as needed)

SIGNATURE Date

Project Status Summary Sheet **Date:**
Consultant:
Contract No. P-xxxx

			Design Submittals											
			Base Plans (30% Design)		PWD Review (70%) Design		Utility Review (75% Design)		Pre-Final (90% Design)		Final (100% Design)			
Work No.	**Project Description**	**Start Date**	Target Date	Actual Date	Target Date	Actual Date	Target Date	Actual Date	Target Date	Actual Date	Target Date	Actual Date	**To PC Date**	**Comments**
S-XXXXX-R														
S-XXXXX-R														
S-XXXXX-R														
S-XXXXX-R														
S-XXXXX-R														
S-XXXXX-R														
S-XXXXX-R														

 Back to Appendix III

Work No. _____ Date _____

Sheet Nos. _____

If all sheets, write all. If specific sheets, write sheet numbers.

Independent Quantity Verification

I hereby certify that I have calculated the initial set of quantities for the sheets indicated.

_____ _____

Print Name Signature

I hereby certify that I have calculated an additional independent set of quantities for the sheets indicated and that any discrepancies between the two (2) sets of quantities have been resolved. Both sets of calculations will be supplied to the Water Department if requested.

_____ _____

Print Name Signature

EXTERNAL ORGANIZATION'S REQUIREMENTS

Appendix IV

a – Legend for Fire Dept. Review of Hydrant Locations
b – Highway Opening Permit Application (GPIS)
c – ADA Handicap Ramp Design Guidance
d – Highway Opening Guidelines
e – PennDOT Highway Occupancy Permit
f – Police Support for Utility Construction
g - Philadelphia Gas Works (PGW) Agreement
h - Roadway Grading Plan Procedure
i – PennDOT Pre-EPS Submittal Form and Instructions

FIRE HYDRANT LEGEND

- INDICATES HYDRANT TO BE REMOVED
- INDICATES HYDRANT TO BE INSTALLED
- INDICATES HYDRANT TO REMAIN
- INDICATES HYDRANT TO BE REMOVED AND REPLACED

FIRE HYDRANT LEGEND

- INDICATES HYDRANT TO BE REMOVED
- INDICATES HYDRANT TO BE INSTALLED
- INDICATES HYDRANT TO REMAIN
- INDICATES HYDRANT TO BE REMOVED AND REPLACED

FIRE HYDRANT LEGEND

- INDICATES HYDRANT TO BE REMOVED
- INDICATES HYDRANT TO BE INSTALLED
- INDICATES HYDRANT TO REMAIN
- INDICATES HYDRANT TO BE REMOVED AND REPLACED

FIRE HYDRANT LEGEND

- INDICATES HYDRANT TO BE REMOVED
- INDICATES HYDRANT TO BE INSTALLED
- INDICATES HYDRANT TO REMAIN
- INDICATES HYDRANT TO BE REMOVED AND REPLACED

FIRE HYDRANT LEGEND

- INDICATES HYDRANT TO BE REMOVED
- INDICATES HYDRANT TO BE INSTALLED
- INDICATES HYDRANT TO REMAIN
- INDICATES HYDRANT TO BE REMOVED AND REPLACED

FIRE HYDRANT LEGEND

- INDICATES HYDRANT TO BE REMOVED
- INDICATES HYDRANT TO BE INSTALLED
- INDICATES HYDRANT TO REMAIN
- INDICATES HYDRANT TO BE REMOVED AND REPLACED

FIRE HYDRANT LEGEND

- INDICATES HYDRANT TO BE REMOVED
- INDICATES HYDRANT TO BE INSTALLED
- INDICATES HYDRANT TO REMAIN
- INDICATES HYDRANT TO BE REMOVED AND REPLACED

Back to Appendix IV

Appendix IVb – Highway Opening Permit Application (GPIS)

The process for attaining Approvals for Utility Street Openings Guaranteed Paving Information System (GPIS) **is being updated. Please check with the PWD Project Engineer for updates before completing the forms on the GPIS web application.**

PHILADELPHIA STREETS DEPARTMENT
ADA CURB RAMP DESIGN/ CONSTRUCTION APPROVAL SUBMISSION REQUIREMENTS
(01/25/2018)

CURB RAMP DESIGN APPROVAL

The design submission shall include following documents (See section II of ADA Reference Guide for more details):

- A Cover/Transmittal Letter including brief description of the project and contact information of designer/contractor/owner.
- Curb Ramp Summary sheet, listing intersections, ramp ID, TIF information etc.
- Curb Ramp Plans, signed by the contractor's design Engineer (11" X 17" size).
- PennDOT's (District-6) CS-4401 forms **(03-2014 version, excel file)**
- Applicable Technically Infeasible Forms (when design does not meet RC-67M guidelines)

Case 1: For Ramps NOT crossing a State Route & Project is NOT funded by Federal/State Government

Above documents shall be submitted in **1 CD + 1 Hard (color) copy in a 3 ring binder** to:
Ankitkumar Patel, ADA Coordinator, Streets Department – City of Philadelphia
940 Municipal Services Building, 1401 JFK Blvd, Philadelphia, PA 19102
(Contact: **Office**: 215 686 5511, **Cell:** 267-593-5522, Email: ankitkumar.patel@phila.gov)

Case 2: For Ramps crossing a State Route

Above documents shall be submitted in **1 CD + 1 Hard (color) copy in a 3 ring binder** to:
Ankitkumar Patel, ADA Coordinator, Streets Department – City of Philadelphia
940 Municipal Services Building, 1401 JFK Blvd, Philadelphia, PA 19102
(Contact: **Office**: 215 686 5511, **Cell:** 267-593-5522, Email: ankitkumar.patel@phila.gov)

AND

If the project is funded by Federal/State Government:	If the project is NOT funded by Federal/State Government:
Above documents shall be submitted in **3 Hard (color) copies in 3 ring binders** to: Francis Hanney, Traffic Manager & ADA Coordinator, District 6 4th Floor, 7000 Geerdes Blvd., King of Prussia, PA 19406-1525 Contact Ph: 610 205 6560 Email: fhanney@pa.gov	Above documents shall be submitted in **EPS System** (To get access to the online EPS system, an applicant must become a business partner. To become a business partner contact Matthew Miele, District Permit Manager at 610-205-6795 or the District 6-0 EPS Help desk, Mr. John Porrini at 610-205-6703)
(Please refer PennDOT's ADA Reference Guide for more details on PennDOT's requirements)	

FIELD CHANGE APPROVAL

During construction if any ramp does not meet approved design and exceeds RC-67M standards due to unforeseen site constraints, the same shall be brought to the notice of the City & State to obtain revised approval (For details, see PennDOT's Field Change Process)

CONSTRUCTED (AS BUILT) CURB RAMP ACCEPTANCE

Please note that an As-built submission is required within 30 days of curb ramp construction.
The As-built submission shall include following documents:

- A Cover/Transmittal Letter including ADA Log number of the project and contact information of designer/contractor/owner.
- Curb Ramp Summary sheet, listing intersections, ramp ID, TIF information etc.
- PennDOT's CS 4401 forms (latest Statewide Inspection form). (Ensure that the first & last name along with company name of both the Investigator 1 (contractor) and Investigator 2 (engineer) are indicated in the inspection form, A minimum of three pictures inserted in along with copies of approved TIF).

Case 1: For Ramps NOT crossing a State Route & Project is NOT funded by Federal/State Government

Above documents shall be submitted in **1 CD + 1 Hard (color) copy in a 3 ring binder** to:
Ankitkumar Patel, ADA Coordinator, Streets Department – City of Philadelphia
940 Municipal Services Building, 1401 JFK Blvd, Philadelphia, PA 19102
(Contact: **Office**: 215 686 5511, **Cell:** 267-593-5522, Email: ankitkumar.patel@phila.gov)

Case 2: For Ramps crossing a State Route

Above documents shall be submitted in **1 CD + 1 Hard (color) copy in a 3 ring binder** to:
Ankitkumar Patel, ADA Coordinator, Streets Department – City of Philadelphia
940 Municipal Services Building, 1401 JFK Blvd, Philadelphia, PA 19102
(Contact: **Office**: 215 686 5511, **Cell:** 267-593-5522, Email: ankitkumar.patel@phila.gov)

AND

If the project is funded by Federal/State Government:	If the project is NOT funded by Federal/State Government:
Above documents shall be submitted in **A CD with as-built forms in Excel format** to: Bernard B. McGowen, ADA Construction Coordinator, Penn DOT–District 6-0, 7000 Geerdes Blvd, King of Prussia, PA 19406 Phone:6102056718, email: bmcgowen@pa.gov	Above documents shall be submitted in **1 Hard (color) copy in 3 ring binders + 1 CD** to: Calene Maroski Philadelphia County Permits Supervisor 1901 Ruffner Street, Philadelphia, PA 19140 Cell: 610.248.2732 Phone: 215.225.1415 | Fax: 215.560.6668 Email: camaroski@pa.gov
(Please refer PennDOT's ADA Reference Guide for more details on PennDOT's requirements)	

The Philadelphia Streets Department

Regulations Governing Street Openings, Excavations and Restoration

Section 1. Authority.

These Regulations are promulgated pursuant to Section 5-501 of The Philadelphia Home Rule Charter, which provides as follows:

> "Street Openings and Excavations. The Department of Streets shall determine the location, time, method and manner of making any opening or excavation in any City street, of installing any underground street structure, and of any repaving required because of such openings, excavations or installations."

-

Section 2. Definitions.

(1) In these Regulations, the following definitions shall apply.

(a) Applicant: The person or agency submitting an application for any permit addressed by these Regulations, and agreeing to the requirements herein;

(b) Commissioner: The Streets Commissioner and designees, as set forth in Philadelphia Code, section 11-701(1)(k);

(c) Developer: A private party for whom multiple Applicants or Permittees may be contracted to perform work within the Right-of-Way, as part of a larger development resulting in private paving work.

(d) Emergency or Emergency Condition: A condition that, in the judgment of the Commissioner constitutes an imminent risk to the health, welfare, or safety of the public, or has caused or is likely to cause Facilities already installed to be unusable and result in loss of the services provided through the Facilities, as set forth in Philadelphia Code, section 11-701(1)(n);

(e) Facility: Conduit, pipes, cables, wires, lines, towers, optic fiber, antennae, poles, associated equipment and appurtenances, and any other facilities (exclusive of water and sewer pipes in plumber's ditches and end user devices) located in the Right-of-Way and designed, constructed, and/or used, by Telecommunications Providers, Cable Service and Open Video System Service providers, Information Service Providers, Public Utilities, or other persons for transmitting, transporting, or distributing communications, telecommunications, electricity, natural gas or manufactured gas, oil, gasoline, steam, water, waste water, or any other form of energy, signal or substance, as set forth in Philadelphia Code section 11-701(1)(p);

(f) Guaranteed Pavement Information System ("GPIS"): The online permitting system developed for and used by the Streets Department in connection with the Department's street opening permit process. Through GPIS, information is also exchanged between Facility owners and the City relating to construction, projects and events which may affect City Rights-Of-Way. One of the goals of GPIS is to better coordinate potential construction or other projects in the City Rights-Of-Way with the City's street repaving/resurfacing program, special events within the City and other activities affecting City streets;

(g) Historic Street: Any Roadway Block listed on the Philadelphia Historic Street Paving Thematic District Inventory, as may be updated from time to time by the Department.

(h) Municipal Radio: The Communications division of the City of Philadelphia's Office of Innovation and Technology ("OIT"). Municipal Radio operators provide communications between City agencies on a round the clock basis. They receive calls and dispatch to other agencies per City protocol for emergency situations. Municipal Radio is also known as the "City Dispatch" or "Unified Dispatch;"

(i) New Facility in an Existing Location: Work involving the installation of a new Facility on top of, underneath, or alongside an existing Facility where the existing Facility is not being abandoned and physically removed. The new Facility will increase the total footage for purposes of calculating the Facility owner's Right-of-Way related fees. This type of project is entered into GPIS as a "Tier I or Tier II" project as defined in these Regulations;

(j) Permittee: The person or agency to whom the permit has been issued;

(k) Private Paving: All work by any private entity within the public Right-of-Way that results in the restoration or construction of any curb, sidewalk, roadway pavements, and associated Facilities and Structures as may be permitted within the public Right-of-Way by City Code, or act of City Council;

(l) Right-of-Way: The surface of and space above and below any real property in the City in which the City has a regulatory interest, or interest as a trustee for the public, as more specifically defined in the Philadelphia Code section 11-701(1)(dd);

(m) Right-of-Way Unit: The Philadelphia Streets Department unit responsible for regulation of the Right-of-Way and compliance with the requirements of Chapter 11-700 of the Philadelphia Code.

(n) Roadway Block: That area of the roadway between a street's curb lines, and bounded at either end of the block by the intersecting street's center line, as defined by the Street Department's GIS Centerline data.

(o) Same Size in the Same Location: Work involving the replacement of an existing Facility with a new Facility that is substantially identical in size and shape to the original Facility;

(p) Service Connection: The type of work involving a Facility that will be installed starting from an existing Facility (through a main, duct, manhole, pole, etc.) and will end at a customer service connection;

(q) Streets Department or Department: The City of Philadelphia, Streets Department, a City Department responsible for the construction, maintenance, lighting and sanitation of the streets.

(r) Street Occupancy Permit: A permit issued by the Streets Department to a contractor or agency, authorizing the temporary (partial or full) closure of the Right-of-Way, including the roadway and/or footway, for the temporary placement of equipment necessary to perform work. These permits are also commonly known as “Street Closure” or “Lane Closure” permits;

(s) Streets Opening Permit: The permit required by the Philadelphia Code and/or Streets Department Regulations and issued by the Streets Department to open or excavate within the City Right-Of-Way;

(t) Structure: Utility maintenance hole covers (manholes), castings, vaults and other infrastructure breaking the surface of any portion of the Right-of-Way including their underground supports and foundation.

(u) Substantial Improvement: Reconstruction, rehabilitation, addition, or other improvement of a structure, the cost of which equals or exceeds 50 percent of the market value of the structure before the "start of construction" of the improvement.

(v) Water Department: The Philadelphia Water Department, a City Department responsible for producing safe drinking water and protecting the region’s water resources by collecting and treating wastewater and storm water.

Section 3. Permit Required.

(1) Possession. Persons in charge of construction work on the streets must have in their possession, at all times while so engaged, a permit authorizing the work and issued by the Department.

(2) Violation of Regulations. Failure at any time to fully and faithfully comply with these Regulations, and such further regulations as the Department may from time to time promulgate, or to pay promptly such expenses as herein authorized, shall immediately operate as a forfeiture of permits issued, and debar the Permittee from receiving any further permits until released by action of the Department. If any work or precaution necessary to protect the public in

(3) the use of the streets is omitted or imperfectly performed by the Permittee, then the Department shall serve a formal notice on the responsible Permittee, and immediately cause the necessary corrective work to be performed at the expense of the Permittee.

(4) Repeated Violations. The Department, at its sole discretion, may refuse to issue permits to any Applicant who has been found by the Department to have committed repeated violations of these Regulations;

(5) Period of Validity of Permit. Permits shall be valid for a period of twelve (12) months from the date of issuance by the Department, unless a shorter period is indicated on the permit. If no work is performed under the permit during this period, the permit will be void at the expiration of the twelve-month period. At the expiration of twelve months from the date of issuance of an original permit, Applicants may submit a new application for a permit, subject to the approval of the Department and the payment of the associated Right-of-Way management fees.

Section 4. Method of Making Application.

(1) Application. Applicants seeking permission for the opening and structural occupancy of a street in the City of Philadelphia shall file with the Department:

(a) A written application indicating the full name and business address of the Applicant (registered owner of property of record), and a statement of the character and purpose of the proposed work.

(b) An electronic submittal showing the complete details of the proposed work and indicating the character and location of all adjacent existing Facilities and Structures.

(c) A summary of such other information as may be necessary to enable the Commissioner to reach a full and definite understanding of the entire situation.

(2) Alteration of Application. After the approval by the Department of an application and the issuance of the permit, the terms, conditions or intent of the application, and the accompanying drawings shall not thereafter be altered or departed from without the previously obtained consent of the Commissioner; except that in cases of Emergency the Department may authorize modifications when necessary.

(3) Prerequisites for the Issuance of a Permit. No permit will be issued until the Applicant has:

(a) Complied with the provisions of Chapter 11-700 of the Philadelphia Code granting the specific privilege.

(b) Agreed to comply with the Regulations of the Streets Department, as indicated herein.

Section 5. Street Opening and Street Occupancy Permits: Tier I.

(1) Tier I. The following activities shall require Tier I Permits:

(a) Installation of any New Facility in a New Location where the total linear footage of excavation is less than sixty feet (60');

(b) Installation of any New Facility in an Existing Location where the total linear footage of excavation is less than sixty feet (60');

(c) Installation of any Service Connection perpendicular to the roadway, where the excavation required is less than sixty feet (60');

(d) Installation of any Service Connection requiring an "L" shaped excavation, where one side is less than sixty linear feet (60'), the other side less than two-hundred fifty linear feet (250');

(e) Replacement of an existing Service Connection of the Same Size in the Same Location, where the excavation is less than two-hundred fifty linear feet (250'); and

(f) Manhole or vault roof and casting repair and replacement where the extent of the work only includes repairing or replacing the roof. All other repairs except lid and frame replacement require Tier II applications.

(2) Application Process. Applicants for Tier I Permits must complete all requirements of this Section.

(3) PA One Call. Applicant must contact the PA One Call system requesting that any Facility owner that has Facilities in the proposed location provide information with regard to the location of existing Facilities. In accordance with PA Act 287 as amended, a responding Facility owner must "initially respond not more than ten working days after receipt of a request from a designer who identifies the site of excavation or demolition work for which he is preparing a drawing."

(a) PA One Call requirements should be started during the project design stage, but no later than the construction stage.

(4) GPIS. The Applicant must enter the project into GPIS for review by the Streets Department Traffic, Street Lighting, Public Property/Capital Projects and Right-of-Way Divisions. Where work is to be conducted in a Historic Street or State Route, the Historic Commission or PennDOT respectively will review.

(a) The Applicant must submit the following documents via email to GPIS.Apps@phila.gov for review:

(i) a drawing containing the information required by PA One Call
(ii) utility clearance transmittal
(iii) PA One Call response ticket

(b) If necessary, the Applicant may also mail the required documents to the following:

(i) Streets Department – Right-of-Way Unit (2 copies)
(ii) Streets Department – Traffic Division
(iii) Streets Department – Street Lighting Division
(iv) Public Property – Capital Projects Division
(v) Historical Commission (if required)
(vi) PennDOT (if required)
(vii) Water Department (if required)

(c) For work on Historic Streets, the City of Philadelphia, Historical Commission will review the location and respond with instructions directly to GPIS. The purpose is to ensure that the roadway and/or footway are restored with in-kind materials. The Historical Commission representative can be contacted at 215-686-7660.

(d) For work on State Routes within the roadway from curb line to curb line, PennDOT will review the location and respond directly to GPIS. This will serve as a clearance from PennDOT regarding resurfacing, reconstruction or other street maintenance on the state system of roadways. The local PennDOT representative can be contacted at 215-225-1415.

(e) For work on streets with porous pavement, the Water Department will review the location and respond with instructions directly to GPIS to ensure that the porous pavement is restored with appropriate materials and that work does not impair the functionality of the porous pavement system. The Water Department Water Records unit can be contacted at 215-685-6260.

(5) Required Tier I Representations. Prior to issuance of a Street Opening Permit, the Applicant shall affirm, by checking a box within GPIS, that the Applicant:

(a) has completed the PA One Call process to ensure utility clearance and resolution of any utility conflicts;

(b) has reviewed, and agrees to comply with all reasonable established industry standards, and all promulgated policies and regulations, governing the interaction between existing Facilities in the proposed location, and the new Facilities;

(c) has reviewed, and agrees to comply with all City of Philadelphia and PennDOT standards regarding the repaving and backfill of the street after excavation;

(d) agrees to comply with any and all state, federal, or national standards applicable to its company and construction and restoration relating to clearance/separation

(e) between utility lines, pipes or other Facility;

(f) is currently compliant with the insurance requirements of section 11-701(2)(d)(.1) of the Philadelphia Code; and

(g) has affirmed the indemnification obligations to the City set forth in section 11-701(2)(d)(.2) of the Philadelphia Code;

(6) Tier I Drawing Standards. The plans which must be submitted for a Tier I street opening permit must adhere to the following standards:

(a) Must be clearly drawn but need not be prepared in Auto-CAD or drawn to scale;

(b) Other utilities' Facilities do not need to be shown;

(c) Must show dimension lines containing all information necessary for GPIS input, which is also the information required by PA One Call;

(d) Must show conduit or main size and depth (cover);

(e) Must use a different linetype or lineweight, clearly showing what is being proposed (start of work to end of work);

(f) Must show the existing Facility into which proposed work will connect;

(g) Must adequately show cover or depth either by:

(i) showing the existing Facility and proposed work in the cross-section; or

(ii) labeling the plan to show cover. The plan should clearly show where the cross-section is from. If depth changes when work is done, the application must be updated with a drawn cross-section showing new depth;

(h) Where service laterals are present, plan must show the address the lateral will be servicing;

(i) Must contain a title block with the following information:

(i) Utility Name;
(ii) GPIS Application Number;
(iii) PA One Call Number;
(iv) Project Name;
(v) Date;
(vi) Person who prepared the plan.

(j) Must contain a North arrow;

(k) Must show street names;

(l) If a duct-bank, the plan need not show how many sub-ducts are being occupied; it should however state generally the type and dimensions of the duct-bank, which typically is capable of holding how many sub-ducts.

(7) Street Occupancy Permit Applications. Applicants may submit any required Street Occupancy Permit application to the Right-of-Way Unit at the same time they submit a Street Opening Permit.

(8) Street Opening Permit Timeline. Under normal circumstances, the Right-of-Way Unit will review submissions within two (2) business days of receiving the Tier I Street Opening Permit application and will indicate whether the application is complete or if additional information is required.

(a) The Right-of-Way Unit will advise the Applicant if the application is incomplete or additional information is required by e-mail and/or by posting a comment in GPIS.

(b) If the application is complete, the Department expects to routinely grant or deny approval of the permit and plans within five (5) business days from the submission date.

(c) If additional information is required, the review time period will begin once the required information is received and the Department expects to routinely grant or deny approval of the permit and plans within five (5) business days from the date the required additional information is received.

(d) On resubmission, the Applicant shall notify the Right-of-Way Unit of resubmission of the required additional information.

(9) Committee of Highway Supervisors Approval. Tier I projects do not require Committee of Highway Supervisors approval.

Section 6. Street Opening and Street Occupancy Permits: Tier II.

(1) Tier II. The following activities shall require Tier II Permits:

(a) Installation of any New Facility in a New Location where the total linear footage of excavation is more than sixty feet (60’);

(b) Installation of any new Facility in an Existing location where the total linear footage of excavation is more than sixty feet (60’);

(c) Installation of any Service Connection perpendicular to the roadway, where the excavation required is more than sixty feet (60’);

(d) Installation of any Service Connection requiring an "L" shaped excavation, where one side is more than sixty linear feet (60'), or the other side more than two-hundred fifty linear feet (250');

(e) Installation of any Service Connection of the Same Size in the Same Location, of more than two-hundred fifty feet (250');

(f) Manhole or vault wall repair and replacement;

(g) Any activity not listed in a Tier I application category except:

(i) manhole lid and frame replacements, which require only a Street Occupancy Permit, not a Street Opening Permit;
(ii) service turn on/shut off; see Section 7 below;
(iii) emergencies; see Section 10 below.

(2) Application Process. Applicants for Tier II Permits must complete all the requirements of this Section.

(3) PA One Call. The Applicant must contact the PA One Call system as a designer, requesting that any Facility owner that has Facilities in the proposed location provide information with regard to the location of existing Facilities. In accordance with PA Act 287 as amended, a responding Facility owner must "initially respond not more than ten working days after receipt of a request from a designer who identifies the site of excavation or demolition work for which he is preparing a drawing."

(4) GPIS. The Applicant must enter the project into GPIS for review by the Streets Department Traffic, Street Lighting, Public Property/Capital Projects and Right-of-Way Divisions.

(a) The Applicant must submit the following documents via email to GPIS.Apps@phila.gov for review:

(i) a drawing containing the information required by PA One Call,
(ii) utility clearance transmittal,
(iii) PA One Call response ticket

(b) If required, the Applicant may also mail the required documents to the following:

(i) Streets Department – Right-of-Way Unit (2 copies)
(ii) Streets Department – Traffic Division
(iii) Streets Department – Street Lighting Division
(iv) Public Property – Capital Projects Division
(v) Historical Commission (if required)
(vi) PennDOT (if required)
(vii) Water Department (if required)

(c) For work on Historic Streets, the City of Philadelphia, Historical Commission will review the location and respond directly to GPIS. The purpose is to ensure that the roadway and/or footway are restored with in-kind materials. The Historical Commission can be contacted at 215-686-7660.

(d) For work on State Routes within the roadway from curb line to curb line, PennDOT will review the location and respond directly to GPIS. This will serve as a clearance from PennDOT regarding resurfacing, reconstruction or other street maintenance on the state system of roadways. The local PennDOT representative can be contacted at 215-225-1415.

(e) For work on porous pavement streets, the Water Department will review the location and respond directly to GPIS. The purpose is to ensure that the porous pavement street is restored with appropriate materials and that the work does not impair the functionality of the porous pavement system. The Water Department Records unit can be contacted at 215-685-6270.

(5) Required Tier II Representations. Prior to issuance of any Street Opening Permit, the Applicant shall affirm, by checking a box within GPIS, that the Applicant:

(a) has completed the PA One Call process to ensure utility clearance and resolution of any utility conflicts;

(b) has reviewed and agrees to comply with all City of Philadelphia and PennDOT standards regarding the repaving and backfill of the street after excavation;

(c) agrees to comply with all state, federal, or national standards applicable to its company and construction and restoration relating to clearance/separation between utility lines, pipes or other Facility.

(d) is currently compliant with the insurance requirements of section 11-701(2)(d)(.1) of the Philadelphia Code; and

(e) affirms the indemnification obligations to the City set forth in section 11-701(2)(d)(.2) of the Philadelphia Code;

(6) Tier II Drawing Standards. The plans which must be submitted for a Tier II Street Opening Permit must adhere to the following standards:

(a) Must be clearly drawn and to scale;

(b) Must show dimension lines containing all information that is necessary for GPIS input, which is the same information required by PA One Call;

(c) Must show all existing Structures and Facilities that either cross or are within five feet (5’) of the proposed work;

(d) Must use a different linetype or lineweight, clearly showing what is being proposed (start of work to end of work);

(e) Must contain a legend showing linetypes and what they mean, unless using City Standards;

(f) Must include a cross-section showing existing Facilities, when crossing the Right-of-Way and when crossing intersection;

(g) Plan and section must show conduit or main size and depth (cover).

(h) If a duct-bank, the plan need not show how many sub-ducts are being occupied; it should however state generally the type and dimensions of the duct-bank, which typically is capable of holding how many sub-ducts.

(i) Must contain a title block with the following information:

(i) Utility Name
(ii) GPIS Application Number
(iii) PA One Call Number
(iv) Project Name
(v) Date
(vi) Person who prepared the plan

(j) Must contain a North arrow;

(k) Must show street names.

(7) Highway Occupancy Permit Applications. Applicants may submit any required Street Occupancy Permit application to the Right-of-Way Unit at the same time they submit a Street Opening Permit.

(8) Street Opening Permit Timeline. Under normal circumstances, the Right-of-Way Unit will review submissions within five (5) business days of receiving the Tier II Street Opening Permit application and will indicate whether the application is complete or if additional information is required.

(a) The Right-of-Way Unit will advise the Applicant if the application is incomplete or additional information is required by e-mail and/or by posting a comment in GPIS.

(b) If the application is complete, the Streets Department expects to routinely grant or deny approval of the permit and plans within twenty-five (25) business days from the submission date. If the application is complete, all Affected Facility Owners are also expected to routinely grant or deny approval of the plans within the same twenty-five (25) day period.

(c) If additional information is required, the review time period will begin once the required information is received and the Department expects to routinely grant or deny approval of the permit and plans within twenty-five (25) business days from the date the required additional information is received.

(d) On resubmission, the Applicant shall notify the Right-of-Way Unit of resubmission of the required additional information.

(e) Upon approval of the plans by all affected Facility owners, the Right-of-Way Unit shall approve the permit within forty-eight (48) hours (excluding weekends and legal holidays) of such approval.

Section 7. Street Excavations to Turn On/Shut Off Service.

Self-Issuing Permits. An Applicant seeking to obtain a Street Opening Permit to turn on or shut off service shall select "Turn On/Shut Off" as the project type in GPIS and shall enter into GPIS the location and offset information for such project. Applicants may provide the PA One Call serial number (where available) for the project, but it is not required. Once this information is entered into GPIS, the Applicant will be able to self-issue a permit for that project by printing the permit itself from GPIS. No drawings or additional information is required. The information input into GPIS in connection with street excavations to turn on or shut off service shall be used only for the City's record purposes, and shall not be used or included in determining the Facility owner's Right-of-Way related fees.

Section 8. Street Occupancy Permit Procedure.

(1) Street Occupancy Permit Application. A Facility owner (or its contractor) which needs to close traffic lanes for utility work shall complete an application for a Street Occupancy Permit for each location and fax the application to 215-686-5062.

(2) Timing. Applications should be submitted at least ten (10) days prior to the start of work.

(3) Dual Permit Applications. When a Street Occupancy Permit is sought in conjunction with a Street Opening Permit, Applicants may submit both applications to the Right-of-Way Unit simultaneously.

(a) All contractor identification information must be indicated on the application when submitting.

(b) The Right-of-Way Unit expects to grant or deny any Street Occupancy Permit application within ten (10) days after the date of complete submission.

(c) If granted, the Street Occupancy Permit will remain in the system as pending until the Street Opening Permit is issued at which point it will be issued as well.

(d) Once a Street Occupancy Permit has been issued, work must be initiated within ten (10) days of issuance of the permit or the permit will be revoked. A revoked Street Occupancy Permit may be reinstated for good cause upon request to the Streets Department.

(e) In the event an Applicant did not submit a Street Occupancy Permit application at the time it submitted its Street Opening Permit application, the Applicant shall send a copy of the Street Opening Permit with its application for the Street Occupancy Permit.

(4) Police Assistance. Requirements for police assistance in conjunction with a Street Occupancy Permit shall be at the sole discretion of the Streets Department.

Section 9. Street Opening Requirements.

(1) Safety Requirements. Before proceeding with the opening of a street, the area immediately adjacent to the work site shall be made safe with lights, barricades or other devices approved by the Department to ensure the safety of the motoring public, pedestrians, and individuals doing the work.

(2) Traffic Regulations. All work shall be conducted in such a manner as to ensure the least possible obstruction to pedestrian, bicycle, and vehicular traffic. The convenience of the general public and of the residents along the Right-of-Way shall be provided for as far as possible.

(a) Temporary approaches to any crossings or intersecting Right-of-Ways shall be provided and kept in thoroughly safe condition, wherever required by the Department. On Right-of-Ways occupied by railway tracks, temporary approaches to the entrance and exits of railway cars shall, where necessary, be provided and maintained.

(b) No Right-of-Way shall be closed to traffic unless a Street Occupancy Permit is obtained and a detour route is approved by the Department.

(c) Every street closed to traffic shall be protected by effective barricades per an approved pedestrian protection plan and standard Streets Department signs, including detour signs, in accordance with current Department standards and placed as directed by the Department. All signage must be maintained by the Permittee for the duration of the closure.

(3) Limitation of Operation. At no time shall more than five hundred linear feet (500') of Right-of-Way be opened or obstructed to traffic without the permission of the Department.

(4) Accessibility of Right-of-Ways. The footways, gutters, inlets and portions of streets adjoining the work or in its vicinity shall not be obstructed nor fouled more than is absolutely necessary. Lawns or grass plots shall not be used for storage purposes. On improved streets the materials, tools and equipment required in connection with the work shall be neatly and properly stored upon the footway at least one foot (1') back of the curbing, and leaving at all times for pedestrians a space which shall be at least five (5') in width, if circumstances so permit. When circumstances dictate that materials, tools and equipment must be stored in the street, a

Street Occupancy Permit must be obtained.

(5) Excavated Material. Material removed from the street opening shall be piled in a location adjacent to the opening so that it does not interfere with vehicular and pedestrian traffic. Excavated materials in excess of the amount needed for backfill shall be removed daily and the street cleaned.

(6) Sanitary Arrangements. The Permittee shall provide and maintain for his employees such sanitary arrangements as may be directed by the Department and shall enforce their exclusive use.

Section 10. Emergencies.

(1) Emergency Reporting Procedures. In the event of an Emergency as defined in these Regulations, any Facility owner (or its contractor) performing Emergency work which requires immediate excavation in the street or closure of traffic lanes must follow the reporting procedures below.

(a) Immediately upon arrival at the site of the Emergency, the Permittee must call Municipal Radio at (215) 686-4514. The Municipal Radio operator shall report the Emergency to traffic police, fire, PennDOT and SEPTA, where needed.

(b) Facility owner (or its contractor) shall provide the following information to the Municipal Radio operator:

(i) Company Name with Identifier;
(ii) Name and telephone number of the person calling;
(iii) Nature of the emergency;
(iv) Whether utility service has been disrupted;
(v) Type of Call:
- Original
- Extension of time

(vi) Excavation required?
- Yes
- No

(vii) Street Closure required?
- Full
- Partial
- None

(viii) Duration of work (provide the number of hours expected to resolve the emergency);
(ix) Location of work (provide the incident address or the hundred block);
(x) Name and telephone number of the person calling (the telephone number should be a number where they can be reached for the duration of the Emergency work).

(c) Each Facility owner shall also provide the Department with the phone number of its primary office responsible for such work. In the case of a declared emergency, the

contact person will be the Facility owner's designated representative working with the City's Emergency Operations Center ("EOC") and may be contacted through EOC.

(d) All utilities must make an additional call to Municipal Radio if the work crew remains at the site longer than was reported in the original notification.

(2) Emergency Utility Notification Number ("EUN"). The Municipal Radio operator will generate and provide the Facility owner (or its contractor) with an Emergency Utility Notification ("EUN") number.

(3) Emergencies Requiring Excavation. If the Emergency will require excavation in the street, the following additional procedures must be followed:

(a) Facility owner (or its contractor) shall provide the following additional information to the Municipal Radio operator:

(i) Size of excavation (Length, Width, and Depth);
(ii) Curb Offsets;

(b) The Municipal Radio operator will generate and provide the Facility owner (or its contractor) with an EUN number. The Facility owner must later enter the EUN number into GPIS when they obtain the Emergency Permit. Municipal Radio shall then forward this information to the Department via an emergency notification website setup specifically for this use, which will then send an e-mail to the Facility owner's generic e-mail address (as provided by the Facility owner), also containing the EUN number.

(c) Within seven (7) days of completion of the emergency-related excavation, the Facility owner shall enter the required information into GPIS, using the EUN number provided by Municipal Radio and/or the Department.

(4) Use of Emergency Information. The information inputted into GPIS in connection with emergencies shall be used only for the City's record purposes, and shall not be used or included in determining the Facility owner's Right-of-Way related fees, as may be required under Chapter 11-700 of the Philadelphia Code.

Section 11. Trench Standards, Steel Plate Procedures, Backfilling.

(1) Trench Standards. All Permittees must adhere to the following:

(a) All applications and all work and restorations of trenches or other openings must comply with Department trench standards for both Permanent (L-901) and Temporary (L-902) Trench Restoration.

(b) All plating and decking installed by the Permittee shall be made safe for vehicles and/or pedestrians and shall be adequate to carry the load. The size of the plate or decking shall be large enough to span the opening, be firmly placed to prevent rocking and shall overlap the edges of trenches and openings and be sufficiently ramped with cold patch or concrete, to provide smooth riding and safe condition.

(c) All plating and decking shall be fastened by pining or countersinking or otherwise to prevent movement. Steel plates shall be pinned in each corner with a smooth headed pin that does not protrude above the plate more than one half (0.5”) inches. The pins must extend into the street surface at least three inches (3”).

(d) Where deflections are more than ¾”, heavier sections of plates or decking or intermediate supports shall be installed. Plates must extend at least twelve (12”) inches beyond the edge of the excavation in all directions. The plate must be ramped with asphalt at least six (6”) inches wide.

(e) All steel plates or decking must be permanently labeled with the identity of the owner.

(f) Prior to placing any steel plating or decking the Permittee shall provide the Right-of-Way Unit inspector with an emergency telephone number in the event any steel plating or decking is dislodged.

(2) Removal. Upon notice from the City, the Permittee shall remove or restore any dislodged steel plating or decking to a safe condition within six (6) hours upon receipt of notice by the Permittee.

(a) In the event it becomes necessary for the City to restore, adjust or remove any steel plating or decking, the Permittee shall reimburse the City for all costs.

(b) Plating and decking must be removed immediately upon completion of permanent restoration.

(3) Extended Use. Any steel plate or decking remaining in the Right-of-Way for more than seventy-two (72) hours must be reported as follows:

(a) to the Right-of-Way Unit Monday through Friday from 8:00 AM to 5:00 PM (215-686-5501);

(b) to Municipal Radio at all other times (215-686-4514), with a request that the operator also notify the Right-of-Way Unit (215-686-5621).

(4) Backfilling of Trenches and Other Openings. Ditches and other street openings shall not be backfilled until all tests required by the various utility companies and/or the Water Department have been completed.

(a) Trenches and other openings shall be carefully backfilled with materials approved by the Streets Department, consisting of earth, loam, sandy clay, sand and gravel or other approved materials, free from large clods of earth or stones, deposited in six-inch (6”) layers.

(b) Care shall be taken to ensure thorough compaction of the fill underneath water, sewer, gas, steam, oil or other pipes in order to ensure appropriate support. Each layer

shall be thoroughly compacted by rolling, tamping with mechanical rammers, or by hand tamping with heavy iron tampers, the tamping face area of which shall not exceed twenty-five square inches (25”). Each layer shall be compacted to a density at least equal to that of the surrounding earth, so that paving of the area can proceed immediately after backfilling has been completed.

(c) Where water, sewer, gas, steam, oil or other pipes are specially coated for protection against corrosion, care shall be taken not to damage the coating.

(d) Upon completion of the backfill the street opening shall be made safe by topping the dirt backfill with an asphaltic cold mix paving material in a level plane with the surrounding roadway surface, rolled with an approved method, and not creating a hump or depression in the restoration area.

(e) Any trenches and other openings improperly backfilled or where settlement occurs, shall be reopened to the depth required for proper compaction, then refilled and compacted with the surface restored to the required grade. Upon completion of the backfilling of trenches and other openings in Right-of-Way where traffic is allowed, these trenches and openings shall be immediately repaved temporarily with suitable material and maintained until permanent paving is constructed.

(5) No trenches or excavations shall be left open overnight unless approved by the Department. Open excavations shall be protected with concrete jersey barriers, steel plates, or other methods approved by the Department.

(6) Removal of Temporary Facilities and Structures. Within twenty-four (24) hours after the completion of the work, the Permittee shall , remove all temporary Facilities and Structures built by the Permittee, along with all rubbish and surplus materials, from the site of the work, and leave the site clean and presentable.

Section 12. Plumber’s Ditches.

(1) Requirements. Plumbers shall comply with all applicable regulations governing the opening and backfilling of ditches.

(a) Plumbers shall be responsible for their ditch openings for a period of thirty (30) days after receipt by the Streets Department of notice by the plumber that the opening has been backfilled. Such notice shall be filed electronically or as otherwise specified by the Department.

(b) If the backfilling and temporary topping is inadequate, or was performed improperly, the plumber’s responsibility for the opening shall continue beyond thirty (30) days until such time as the ditch is permanently restored.

(c) If the Streets Department responds to a complaint for an unsafe location caused by the plumber's failure to properly backfill or top, the plumber will be billed for the Department’s time and material expense in restoring the ditch to a safe condition.

(2) Penalties. In addition to any other applicable penalties specified by regulation of the Philadelphia Code, failure to notify the City that an opening was made and backfilled will not relieve the plumber of responsibility and may be cause for the City to deny him any future permits. If the plumber fails to electronically register the appropriate backfill notice as directed in Section 12(1)(a) for two (2) ditches, the plumber will be prohibited from purchasing new plumber ditch permits until the proper notifications have been registered with the Streets Department.

(3) Timing. Plumber permits shall be valid for thirty (30) days. If a plumber obtains a permit, then determines that the street opening is not needed, the plumber may apply for a refund of the permit purchase price within the thirty (30) day permit period. After the expiration of the plumber permit, no refunds will be issued.

Section 13. Permanent Restoration of Pavement.

(1) Restoration. All pavements shall be promptly restored to the extent directed by the Streets Department and with the same character of material, equal in composition and in color to match the existing adjacent pavement, and in accordance with the latest standard specifications of the Department.

(2) Cut Back. Where the surface area of any ditch is greater than one-half (1/2) square yard, before restoration of the pavement, the base course shall be cut back six inches (6”) wider than the original opening on all sides. If the edge of the base course adjacent to and paralleling the curb is within two feet (2’) of the edge of the paving or curb, after cut back, the paving shall be removed between the edge of the cut back and the edge of paving or curb.

(a) The surface course shall be cut back six inches (6”) from the outer edge of the original opening. The thickness of the base course restoration shall equal the thickness of the existing pavement but shall not be less than eight inches (8”) in depth. This same depth applies to streets with stone black base or other types of temporary paving base. The concrete shall be brought up to the same level as the existing base course.

(b) There will be no cut back required for any ditch with a surface area one-half (1/2) square yard or less.

(3) Surface Preparation. Just prior to the application of the asphalt top to any ditch or trench, all exposed vertical surfaces of existing binder and surface course shall be painted with hot asphaltic cement. The surface of the concrete base shall be thoroughly cleaned and the application of a tack coat of bituminous material E-1 (AASHTO Equivalent RS-1) in the amount of 1/15 of a gallon per square yard shall be applied.

(4) Finished Surface. Unless approved in writing by the Streets Department, the finished or wearing surface of the restored ditch shall match in kind the existing roadway surface pavement, including restorations in streets that have granite block, brick, or other special surfaces. The topped-off ditch shall have a smooth surface showing no evidence of honeycomb, roller or iron marks.

(a) After topping is completed the seam between the existing surface course

and the newly restored top shall be neatly sealed with asphaltic cement. If the ditch is to be immediately opened to traffic, dry sand, or Portland cement shall be evenly spread over the newly installed seal to prevent it being picked up or spread by automobile tires.

(b) The use of asphaltic or black base will be permitted only where a ditch has to be restored because the street must immediately be opened to traffic. Such cases would include ditches in track areas and streets with only one lane available for traffic. Black base may also be used to patch ditches in inclement weather or where the use of concrete would be impossible or impractical due to future construction. In all cases the permission of the Streets Department must be obtained in writing before black base can be used for ditch restorations.

(c) If restoration is to be in finished concrete roadway paving, the dimensions shall be the same as for base restoration. The finished edge of restoration in concrete pavement shall be made with a concrete saw just prior to the paving operation. The minimum depth of cut shall be one and one half inches (1½").

(5) Line-striping. All line-striping which is disturbed by the excavation must be restored according to the Streets Department's Traffic Engineering Division's specifications for that street. If the line-striping is not done, and the Department has to place the line-striping on the restored area of the street, the Permittee will be billed for the cost to the Department.

(6) Lines and Grades. Where permanent pavement and curbing do not exist, the Permittee will be required to obtain from the Streets Department's Surveys, Design and Construction Division the necessary line and grade stakes. For this service the Permittee will be required to pay in accordance with the schedule of charges specified by the Department

(a) The Permittee will be responsible for preservation of all monuments and bench marks and for all stakes after being set by the Surveys, Design and Construction Division, and any disturbed stakes must be replaced by the district surveyor and paid for at the rate previously indicated.

(7) Restoration of Emergencies. In the event of an Emergency which results in the disturbance of 40% or more of the street, the utility which owns the Facility which caused the damage shall be responsible for determining the scope and extent of the damage in terms of both area and which other utilities' Facilities are affected. The utility which owns the Facility responsible for the damage must inform affected utilities in a timely fashion of the scope and extent of damage, so that the street and Structures in the Right-of-Way can be restored as quickly as possible. The utility whose Facilities caused the damage should contact the Streets Department Chief Highway Engineer to determine how the street will be restored and what party(ies) will bear responsibility.

(8) Maintenance of Pavements. All restored pavements shall be maintained in a condition satisfactory to the Streets Department, during the time of any existing guarantee, or as required by Ordinance of Council, but in no case for a period of less than five (5) years. Notices to Permittees to make maintenance repairs to pavements shall receive attention within twenty-four (24) hours.

(9) Timing of Restoration By Streets Department. Between July 1st and November

30th of each year, permanent restoration of all street openings less than twenty-five (25) square yards in size shall be performed within thirty (30) days after backfilling. Between December 1st and March 31st of the following year, if inclement weather does not allow permanent restoration, street openings may be temporarily restored with cold patch and maintained until permanent restoration is performed.

(10) Inspection of Work. All work and materials used in building Structures and in restoring or maintaining pavements shall be satisfactory to the Streets Department and any work or material condemned by the Department must be replaced at once. Condemned materials shall be immediately removed from the site of the work.

(a) When, in the judgment of the Streets Department, it shall be deemed desirable or necessary to employ one or more special inspectors to supervise the proposed work, such inspector or inspectors shall be appointed by the Streets Department, and a sufficient sum shall be deposited by the Applicant with the Department for the payment of such service.

Section 14. Milling, Paving, and Full Depth Restoration.

(1) Utilities, Full Depth Restoration.

(a) If work in the street for one project disturbs at least 40% of the Roadway Block, the Permittee must do a full depth restoration for the entire length of the Roadway Block.

(b) The 40% trigger applies to the project as constructed. Even if the project is designed and approved at less than 40% disturbance, if the constructed project exceeds the design and approval and disturbs at least 40% of the Roadway Block, then full depth restoration is required.

(c) If more than one utility or agency is involved in work in the street and openings for the project, and the cumulative disturbance of the work, as constructed, is at least 40% of the Roadway Block, the lead utility or agency shall be responsible for a full depth restoration. The lead utility or agency must coordinate with other parties participating in the project and for seeking reimbursement for its costs from those other agencies or utilities.

(d) Full depth restoration includes all line-striping required by the Traffic Engineering Division's specifications for that street. If the line-striping is not done, and the Streets Department has to place the line-striping on the restored street, the lead utility or agency will be billed for the cost to the Department.

(2) Utilities, Milling and Paving.

(a) If work in the street for one project disturbs less than 40% of the Roadway Block, and the work is sewer work or involves replacement of two or more Facilities, the Roadway Block must be milled and paved from curb to curb.

(b) If work in the street disturbs less than 40% of the Roadway Block, and does not meet the criteria in sub-section (a) above, the street openings and excavations must meet the requirements of this Regulation for trench restoration.

(3) Private Developers, Milling and Paving.

(a) Except as noted in Subsections (c) and (d) below, private development projects of the following types which disturb in excess of 40% of the roadway within the Adjacent Roadway Area, or install an average of three or more utility connections per lot or property involved in the development, shall be required to mill and pave the full Adjacent Roadway Area:

(i) New construction or Substantial Improvement of six (6) or more residential lots or properties fronting on the same Roadway Block.

(ii) Any project involving new construction or Substantial Improvement of at least one hundred linear feet (100') of frontage on a Roadway Block;

(iii) Any private development project fronting on an Historic Street.

(b) Adjacent Roadway Area shall mean:

(i) For streets with a legal roadway width of sixteen feet (16') or less, the area of roadway adjacent to the private development project bounded by the two outer property lines of the project, extended to the opposing curb face so as to intersect it at, or near, right angles.

(ii) For streets with a legal roadway width greater than sixteen feet (16'), and where disturbance to the existing pavement extends beyond the centerline of the roadway, the area of roadway adjacent to the private development project bounded by the two outer property lines of the project, extended to the opposing curb face so as to intersect it at, or near, right angles.

(iii) For streets with a legal roadway width greater than sixteen feet (16'), and where disturbance to the existing pavement does not extend beyond the centerline of the roadway, the area of roadway adjacent to the private development project bounded by the two outer property lines of the project, extended to the roadway centerline so as to intersect it at, or near, right angles.

(iv) Where disturbance to the existing pavement does not extend fully to the two outer property lines of the project, the area of roadway adjacent to the private development project bounded by the limit of disturbance of the project extended to the roadway centerline (or opposing curb face, as appropriate) so as to intersect it at, or near, right angles. Such limits of disturbance, when determined by the Street Department, shall not be less than the lesser of one hundred linear feet (100') of street frontage or six (6) residential lots.

(v) Where new construction or Substantial Improvement is at a street corner, the Adjacent Roadway Area shall be either of two areas adjacent to the private development project bounded by the property lines of the project, extended to the opposing curb face so as to intersect it them, or near, right angles.

(c) Where a private development project overlaps with, or includes utility extensions or replacements, the requirements of Section 14 (1) or (2) shall supersede the requirements of this Section.

(d) Where a private development project meeting the criteria of Section 14(3)(a) fronts on an Historical Street and disturbs in excess of 40% of the Adjacent Roadway Area in that Historic Street, or install an average of three or more utility connections per lot or property involved in the development, a full depth restoration of the Adjacent Roadway Area shall be required.

(e) Where milling and repaving is triggered by disturbance in two or more Adjacent Roadway Areas abutting an intersection, the full roadway of the intersection between the four house lines of intersection must be milled and repaved.

(f) The Chief Highway Engineer will appoint all agents responsible for determining the Adjacent Roadway Area, the percentage of the Adjacent Roadway Area disturbed, and any milling and paving requirements; or shall require calculations be prepared by a licensed professional engineer for this purpose. Appeals related to any such determinations or requirements should be submitted, in writing, to the Chief Highway Engineer for consideration.

(g) Disturbed area shall include all trench, curb reconstruction, and cut back areas, per Street Department Standard Details L-892 and L-901. Areas disturbed for reasons other than utility installation or curb reconstruction, including areas disturbed by heavy machinery incidental to construction, may also be included in the disturbed area calculation.

(h) If more than one contractor, utility or agency is involved in work in the street openings for the project and the cumulative disturbance from all those involved is at least 40%, as constructed, the Developer must do the milling and repaving.

(i) Milling and repaving, where required, shall include all line-striping required by the Traffic Engineering Division's specifications for that street. If the line-striping is not done, and the Streets Department has to place the line-striping on the restored street, the Developer will be billed for the cost to the Department.

(4) Completion of all work is to be in a timely manner, and in accordance with the approved plans, as determined prior to the start of construction. Failure to complete any work in this manner will serve as justification for requests by the Streets Department for a revocation of permits, holds on any Certificates of Occupancy, or the issuance of a Stop Work Order, by the Department of Licenses and Inspections.

(5) Degradation fees required for work within any area subject to the milling and repaving or full depth restoration requirements of this Section will be waived. Degradation fees paid in advance of a determination of the applicability of this Section will be refunded.

Section 15. Structures within the Right-of-Way.

(1) Interference with Existing Structures or Facilities. New structures shall not interfere with existing Structures or Facilities, or their connections, except where absolutely

necessary, and then only with the previously obtained written consent of the Commissioners of the departments having jurisdiction over the structures involved. Any modification of existing Structures or Facilities found to be necessary must be made by or under the direction of the department or public utility concerned and at the sole expense of the permittee. All necessary supports and protections to existing Structures or Facilities shall be promptly supplied by or at the expense of the permittee and to the satisfaction of the department or public utility concerned.

(2) Removal Generally. If, in the construction of any municipal work, it shall become necessary to change the location of any existing privately owned Structures or Facilities occupying the Right-of-Way, their location shall be changed, at the sole expense of the owners, to such new locations as shall be directed by the Department.

(3) Minimum Depth of Structures. The minimum depth of Structures constructed within the Right-of-Way shall be as follows:

(a) Roadway between Curb Lines. No portion of a new Structure, when in place, shall be less than twenty-four inches (24”) below the surface of the pavement, except that portion which is designed to form a part of the pavement.

(b) Footways, Curb to Building Line. No portion of a new Structure, when in place, shall be less than fifteen inches (15”) below the footway surface, except that portion which is designed to form a part of the paving.

(c) Vaults. The outside top of vault shall be at least four feet (4’) below the established grade of the footway over the same, in the erection, construction or reconstruction of such vaults. This applies to any vault, whether privately owned or utility, in the Right-of-Way.

(4) Exposed Surfaces of Structures. All Structures within the Right-of-Way shall be maintained within three-eighths inch (3/8”) of the existing surrounding grade. All loose, slippery or broken utility maintenance hole (manhole) covers, castings and other Structures shall be replaced at the direction of and to the satisfaction of the Streets Department.

(5) Leak Proofing of Underground Structures. Any underground Structure within the Right-of-Way, including manholes, vaults, conduits, pipes, or passageways, shall be so constructed and maintained as to prevent the leakage of gas, water, or other liquid into the Structure.

(6) Maintenance of Structures. All privately owned Structures occupying locations in the Right-of-Way, that may be exposed during construction, reconstruction or any municipal work, shall be safeguarded and maintained during the course of the work by the Permittee. Should the condition of the exposed Structure be such as to require reconstruction or the placing of permanent supports, such work shall be performed by and at the sole expense of the owners of the Structure.

(7) Re-Occupation of Vault Space. The City shall in no case be liable for any claim for damages arising from the vacation by the Permittee, or the reoccupation and use by the City for public purposes of any portion or portions of Right-of-Way between the building lines that have been occupied by vaults. The Permittee hereby assumes full responsibility for all claims

arising from the occupation or vacation of the street by and from the construction, maintenance and removal of vaults.

(8) Drawing of Finished Work. Immediately after the completion of permitted work, Permittee shall submit complete detail drawings ("as-builts") in an electronic format as specified by the Streets Department and to a scale satisfactory to the Department, showing the work as constructed, together with a record of the character and location of previously existing Facilities encountered during the progress of the work.

(9) All structures shall at all times be maintained in a condition satisfactory to the Department.

Section 16. Refrigerating Pipes.

(1) Agreement Required. Applicants for permission to lay refrigerating pipes shall enter into an agreement, and give a bond satisfactory to the City Solicitor in the sum of twenty-five thousand Dollars ($25,000.00), indemnifying the City for any loss or damages that may occur in the exercise of the privileges herein granted, or that may hereafter be granted by the Streets Department and shall also be conditioned upon faithful compliance with all the provisions indicated herein.

(2) Construction. The methods and materials used in the construction of refrigerating pipes shall be subject to the approval of the Streets Department and Water Department.

(a) Before laying any pipes, the Permittee shall furnish to the Streets Department a certificate from a responsible agency, certifying to the character, quality, size, thickness, and condition of the pipe and fittings and indicating the test to which the pipe has been subjected. Each length of pipe shall be tested and certified to before being laid.

(b) The pipe line, after being constructed and before the trench is backfilled, shall be subject to hydrostatic test of at least three hundred pounds (300lbs) per square inch for a period of at least three (3) hours. This test shall be made in the presence of representatives of the Water Department and the pipe line to be approved shall meet these requirements.

Section 17. Tunneling.

(1) General Prohibition. Tunneling within the Right of Way to effect repairs is prohibited. There are only two (2) exceptions to this rule:

(a) Placing Facilities under railroad tracks or conduits in accordance with the standard specifications;

(b) With the written approval of the Chief Highway Engineer or designee.

Section 18. Responsibility for Injuries to Persons or Property.

No Liability to City. The Permittee shall be responsible for any injury to any person or any damage to any property resulting from or by the construction or maintenance of the work

herein indicated, or the occupation of the Right-of-Way thereby, or defects or obstructions, or from any other cause whatsoever during the progress of the work or at any time; and Permittee shall indemnify, release, and save harmless the City from all suits or actions of every character, name and description, brought for or on account of any injuries or damages received or sustained by any Structure, Facility, property, person or persons by or from the construction or maintenance of the work herein indicated, the occupation of the Right-of-Way thereby, negligence in safeguarding the work, improper methods or materials used in constructing, or by or on account of any act or omission of the said Permittee or Permittee's agents or employees.

Section 19. Severability.

Severability. If any clause, sentence, paragraph or part of this Regulation, or the application thereof to any person or circumstance, shall for any reason be adjudged by a court of competent jurisdiction to be invalid, such judgment shall not affect, impair or invalidate the remainder of this regulation nor the application of such clause, sentence, paragraph or part to other persons or circumstances but shall be confined in its operation to the clause, sentence, paragraph or part thereof and to the persons or circumstances directly involved in the controversy in which such judgment shall have been rendered.

Section 20. Repeal of Prior Versions.

Repeal. The Regulations of the Department of Streets for Street Openings and Excavations (1955), as well as Regulations for Openings and Restoring Street Openings (1980) as amended in 1986, 2006, and 2012, are hereby repealed. This Regulation is not intended to repeal or modify any portion of The Regulations governing Right of Way Management of the Department of Streets, effective January 12, 2006, as amended in 2009 and 2012.

_____

DAVID J. PERRI, P.E.

Streets Commissioner

PENNDOT

HIGHWAY OCCUPANCY PERMIT INFORMATION

Utility Permits may be issued to install, repair, replace, connect, remove, or disconnect privately, publicly or cooperatively owned lines, facilities and systems which directly or indirectly serve the public or any part thereof.

Driveway/Local Road Permits may be issued to install, alter, or remove a driveway, street or other means of passage of vehicles between the highway and abutting property.

Miscellaneous Permits may be issued to perform seismograph testing, embankment alterations, surface openings, roadway improvements; construct, replace, or remove curb and/or sidewalk; connect to Department drainage facilities; open test holes; install, repair, replace or remove non-utility structures, tipples, conveyors, pedestrian overhead crossings, subways, mines, or pedestrian underpass crossings.

http://www.dot.state.pa.us/Internet/Bureaus/pdBHSTE.nsf/infoOccupancyPermits?OpenForm

GUIDELINES FOR ASSIGNING POLICE SUPPORT

FOR

UTILITY CONSTRUCTION

July 7th, 2016

In the interest of public safety it may be necessary to assign Police support to a utility construction project. The following guidelines are utilized by the Department of Streets in determining the need for Police assistance in conjunction with utility construction. In the event of unforeseen conditions the City reserves the right to deviate from these guidelines.

1. AFFECTED AREAS

The areas of the City in which consideration is given to require Police support are as follows:

- Center City- bounded by the Delaware River on the east, the Schuylkill River on the west, Spring Garden Street on the north, and South Street on the south.
- University City – bounded by 30th street on the east, 40th street on the west, Powelton Avenue on the north, and Civic Center Blvd. and Baltimore Avenue on the south.
- Roosevelt Blvd. from 9th Street to City Limits.
- All other arterial routes throughout the City, which includes State Highways.

2. CONSTRUCTION TIMES

Construction on travel lanes is not allowed during the below listed traffic peak hours.

Morning traffic peak hours are from 6:30 A.M. to 9:30 A.M.
Evening traffic peak hours are from 3:00 P.M. to 6:30 P.M.

There are no regular traffic peak hours on the weekend.

Daytime construction in Center City may occur between the hours of 9:30 A.M. and 3:00 P.M.

Nightime construction in Center City may occur between the hours of 7:00 P.M. and 5:00 A.M. However, construction on Walnut Street in Center City must occur between the hours of 11:00 P.M. and 6:30 A.M.

3. CRITERIA FOR ASSIGNING POLICE SUPPORT

During business hours (8:00 A.M. to 3:00 P.M.), Police support is assigned at the discretion of the Department of Streets whenever the utility or roadway construction will require the closing of a single travel lane or multiple travel lanes. The Police Department determines the number of Police officers required for the construction project. Construction occurring on the sidewalk or in a parking lane will not require Police support unless the contractor's equipment is expected to disrupt a travel lane on a frequent basis and no flagman is provided. Non-arterial roads or streets that have a roadway width of ten (10) feet or less will not require Police support unless an emergency condition warrants it. During non-business hours, a Police supervisor will have the discretion to make the determination for Police support. The assignment of Traffic Police is to be based upon the Traffic Engineer's determination that Traffic Police are needed to actively direct traffic as a jobsite. Terms and conditions required by the Traffic Engineer for the maintenance and protection of traffic shall be annotated on the permit document. When no Traffic Police are required the permit document shall clearly indicate that such a determination has been made.

4. CONTRACT FOR POLICE SUPPORT

When it has been determined by the Department of Streets that Police support is required, the permittee or contractor shall enter into a contract with the Police Department by contacting the Traffic Police Captain's office at **(215) 685-1554** a minimum of twenty-four (24) hours before starting work. If the utility project has more than one location in Center City on any given day, the contractor shall request that one Police officer be assigned per work crew. This officer must have a vehicle and the fee will include payment for use of the vehicle.

5. POLICE CONTACT

In the event it becomes necessary to contact the Police to resolve an issue, the contractor or permittee may call the Police Traffic Unit at **(215) 685-1552.** This phone number is available 24 hours/7 days a week.

6. TEMPORARY NO-PARKING SIGNS WITH POLICE SUPPORT

In the event that the construction will require the restriction of on-street parking, the Police will post temporary no-parking signs prior to the start of construction. At times the responsibility will fall back on the contractor when Officers are not available to post the signs.

7. TEMPORARY NO-PARKING SIGNS WITHOUT POLICE SUPPORT

In the event that the construction will require the restriction of on-street parking, and no Police assistance is required, it is the responsibility of the contractor to post the temporary no parking signs twenty-four hours before that start of construction. These signs may be obtained at the 5th Highway District located at Whitaker Avenue and Luzerne Street. The office number is **(215) 685-9843.**

8. MAINTENANCE AND PROTECTION OF TRAFFIC

Work zone traffic control shall be in accordance with PADOT Publication 213.

9. EMERGENCY CONSTRUCTION

An emergency is defined in Section 11-700 (1) (n) of the Right-of-Way Management Ordinance as "A condition, that in the judgment of the (Streets) Commissioner, constitutes an imminent risk to the health, welfare, or safety of the public, or has caused or is likely to cause Facilities already installed to be unusable and result in the loss of the services provided through the facilities."

Excavation Required Emergencies

A. A Facility owner (or its contractor) which needs to excavate the street or close traffic lanes for emergency work shall contact the City's Municipal Radio operator at 215-686-4514 to report the emergency. The call to Municipal Radio should be from the field and prior to or at the time the excavation or lane closure commences.

B. During the telephone call, if the work involves excavation of the street, the Municipal Radio operator will prompt the Facility owner (or its contractor) to provide the following basic information about the excavation:

i) Name of Facility owner
ii) Name and telephone number of the person calling
iii) Name and contact number of foreman on location
iv) Indicate whether excavation is required
v) Indicate whether a lane closure is required
vi) Location of the emergency work (provide the hundred block)
vii) Nature of the emergency (disruption of service, safety risk to public, or leak)
viii) Duration of work (provide the # of hours expected to resolve the emergency)

C. Each Facility owner shall also provide the Streets Department with the phone

number of its primary office responsible for such work. In the case of a declared emergency, the contact person will be the Facility owner's designated representative working with the City's Emergency Operations Center (EOC) and may be contacted through EOC.

D. The Municipal Radio operator will generate and provide the Facility owner (or its contractor) with an Emergency Utility Notification (EUN) number. The Facility owner must later enter the EUN number into GPIS when they obtain the Emergency Permit. Municipal Radio shall then forward this information to the Streets Department via an emergency notification website setup specifically for this use, which will then send an e-mail to the Facility owner's generic e-mail address (as provided by the Facility owner), also containing the EUN number.

E. If a lane closure is required, Municipal Radio shall also contact and report the emergency to traffic police, the fire department and SEPTA (if required), and prompt the Facility owner (or its contractor) to provide certain information needed for the lane closure.

F. Within seven (7) days of completion of the emergency-related excavation, the Facility owner shall enter the required information into GPIS, using the EUN number provided by Municipal Radio and/or the Streets Department. The information inputted into GPIS in connection with emergencies shall be used only for the City's record purposes.

Non-Excavation related Emergencies

A. If the emergency work does not involve street excavation, but nonetheless requires a lane closure (e.g., a Facility owner utilizes its manholes to complete the emergency work), The Facility owner (or its contractor) shall still report the work to Municipal Radio to help arrange the lane closure. Municipal Radio shall call and report the required lane closure to traffic police, the fire department, and SEPTA (if required), and prompt the Facility owner (or its contractor) to provide certain information needed for the lane closure. During the telephone call, the Municipal Radio operator will generate and provide the Facility owner (or its contractor) a EUN number for the Facility owner's records. Municipal Radio shall then forward this information to the Streets Department via an emergency notification website setup specifically for this use, which will then send an e-mail to the Facility owner's generic e-mail address (as provided by the Facility owner), containing the EUN number.

In the event that Police protection assistance is required, as described in Section 3, the contractor shall call the Traffic Police District Headquarters at **(215) 685-1552**.

If a police officer questions the contractor on the job site, they will refer the officer to the Police Department's dispatcher for verification that the emergency was properly

called in. If there is a question regarding the need for Police protection during non-business hours, a Police supervisor will have the discretion to make the determination.

10. UNSAFE CONDITIONS AND PERMIT VIOLATIONS

The Police reserve the right to abate unsafe conditions as necessary and bill the contractor for the incurred costs. During normal business hours the Police shall immediately contact the Right-of-Way Unit at (215) 686-5524 to report unsafe conditions and/or violations of the issued permit. For situations that occur outside of normal business hours, the Police shall contact the Right-of-Way Unit on the next business day.

11. MANAGEMENT

The Department of Streets shall meet with the Traffic Police and the Committee of Highway Supervisors on an annual basis to review the effectiveness of this policy and make amendments as necessary. All parties shall notify the Right-of-Way Manager of all violations of this policy and the Right-of-Way Unit shall maintain records of violations, complaints and resolutions.

Approved and adopted by the Committee of Highway Supervisors on

_____.

* * * * *

City of Philadelphia

LAW DEPARTMENT
1101 Market Street
5th Floor
Philadelphia, PA 19107
(215) 685-6116

Romulo L. Diaz, Jr.
City Solicitor

MEMORANDUM

To: Romulo L. Diaz, Jr., City Solicitor

From: J. Barry Davis, Divisional Deputy City Solicitor

Date: August 25, 2005

Subject: PGW/Water Department Settlement and Reimbursement Agreement

---

The attached agreement, provided for your signature, settles all reimbursement obligations of the Water Department to PGW through December 31, 2004 for PGW pipe relocation work caused by water/sewer reconstruction. In addition, the agreement establishes the new framework for PGW to request reimbursements from the Water Department when PGW must relocate its pipes.

Under the settlement, the Water Department will pay PGW the following amounts from the Water Fund's construction account (capital funds):

Year	Amount
FY 2004	$ 1,069,451
FY 2005 (1/2 year)	$ 757,266
Total	$ 1,826,717

PGW would like to receive these funds as quickly as possible. Please have Jackie call me after the documents are signed. If you have any questions, please call me.

SETTLEMENT AND ENFORCED WORK REIMBURSEMENT AGREEMENT

This Settlement and Enforced Work Reimbursement Agreement (this "Agreement"), made and entered into as of the 1st day of July 2005, by and between PHILADELPHIA FACILITIES MANAGEMENT CORPORATION, a non-profit Pennsylvania corporation in its capacity as operator and manager of the municipally owned PHILADELPHIA GAS WORKS pursuant to an Agreement with the City of Philadelphia dated December 29, 1972, as amended (collectively, "PGW") and THE CITY OF PHILADELPHIA, by and through its WATER DEPARTMENT ("PWD"),

WITNESSETH:

WHEREAS, PGW and PWD are parties to that certain "Basic Agreement" effective September 1, 1988, as supplemented by that certain "Working Agreement" dated November 28, 1988 (collectively, the "Reimbursement Agreement"), which has governed reimbursement levels to PGW for PGW work on enforced City reconstruction projects; and

WHEREAS, for several years PGW has objected to certain of the financial terms of the Reimbursement Agreement as they pertain to enforced PWD projects; and

WHEREAS, PGW and PWD have engaged in discussions to modify the terms of the Reimbursement Agreement as it pertains to PWD projects, including without limitation, with respect to future funding levels; and

WHEREAS, as a result of such discussions, PGW and PWD settled and resolved their dispute about reimbursement sums due for PWD's fiscal year 2003 (i.e., July 1, 2002 – June 30, 2003) (each such one year period beginning on July 1 being the "FY") and prior years, all in accordance with the terms and conditions of that certain Memorandum of Agreement between the parties dated on or about November 23, 2003 (the "Memorandum of Agreement"); and

WHEREAS, from FY 2004, inclusive, PGW has continued to work in good faith on enforced PWD reconstruction projects during the pendency of such discussions; and

WHEREAS, PGW and PWD have reached an agreement in principle regarding the terms and conditions of reimbursement to PGW for enforced PWD work performed in FY 2004 and forward and wish to forever settle and memorialize such terms in this Agreement.

NOW, THEREFORE, in consideration of the mutual covenants and agreements herein contained, PGW and PWD hereby agree as follows:

1. Term; Termination of Reimbursement Agreement.

   1. This Agreement shall be effective as of the date first set forth above and shall continue for a period of one (1) year thereafter (the "Initial Term"). Thereafter, this Agreement shall automatically be renewed for successive periods of one (1) year unless

written notice of termination is given by a party to the other party not later than ninety (90) days prior to the end of the then current term; provided, however that any work performed or project commenced by PGW during the term of this Agreement shall be reimbursed by PWD in accordance with the terms hereof even if submission of required invoices does not occur until after the Agreement terminates.

2. The Reimbursement Agreement shall be deemed terminated as of June 30, 2003 at 11:59 P.M., Eastern Standard Time.

2. Definitions. Except in those certain instances where the text expressly states another meaning, when used in this Agreement the following terms shall mean:

1. "Enforced Service Work" shall mean work undertaken by PGW to renew or reconnect any existing gas services connected to any gas Main impacted by Physical Interference Work, Slope Interference Work, or qualifying Practical Minimum Footage Allowance Work categories. Enforced gas services shall be further identified by the following sub-categories: (.1) Bare or Unprotected Steel Services, (.2) Protected Steel Services, (.3) Plastic Services, and (.4) Plastic Services Without Valve. Enforced Service Work may also be referred to by the parties as "Work Category 5".

2. "Main" shall mean any PGW gas main. Main shall be further identified by the following sub-categories: (.1) Ductile Iron Main, (.2) Plastic Main, (.3) Coated and Unprotected Steel Main, and (.4) Cathodically Protected Steel Main.

3. "PGW Convenience Work" shall mean work done to replace and/or renew an existing PGW Main or install a new PGW Main for engineering, economic or other reasons, other than Physical Interference Work, Slope Interference Work, or Practical Minimum Footage Allowance Work. PGW Convenience Work will not qualify for reimbursement. PGW Convenience Work may also be referred to by the parties as "Work Category 4".

4. "Physical Interference Work" shall mean work undertaken because the existing Main is in direct physical interference of a PWD installation or directly undermined by the PWD trench. Physical Interference Work may also be referred to by the parties as "Work Category 1".

5. "Practical Minimum Footage Allowance Work" shall mean additional work necessary to replace the existing Main which is impacted by either Physical Interference Work or Slope Interference Work and any work recommended from an engineering perspective in order to avoid difficult or impractical tie-ins even though it is neither within the Physical Interference Work or Slope Interference Work zones. This will be limited to no more than fifteen percent (15%) of the footage determined using the Physical Interference Work and Slope Interference Work criteria, based upon a per block calculation. Practical Minimum Footage Allowance Work may also be referred to by the parties as "Work Category 3."

6. "Prudent Main List" shall mean a list of Mains scheduled for replacement by PGW ranked in order of replacement priority, with a lower number indicating greater priority of replacement. The Prudent Main List is re-ordered from time to time.

7. "Service" shall mean any PGW gas service connected to a Main.

8. "Slope Interference Work" shall mean work undertaken because the existing Main is within the zone of influence of a PWD installation. The zone of influence is defined by the area within a 1:2 slope line (one horizontal – two vertical) from the bottom outside edge of the PWD excavation. Slope Interference Work may also be referred to by the parties as "Work Category 2".

3. Payment for FY 2004 and First Two Quarters of FY 2005. Not later than July 1, 2005, PWD shall pay PGW the sum of One Million Eight Hundred and Twenty-Six Thousand Seven Hundred and Seventeen Dollars ($1,826,717) as compensation for all PGW work undertaken as a result of PWD enforced work completed by PGW during FY 2004 ($1,069,451) and the 1st and 2nd Quarters of FY 2005 ($757,266).

4. Revision of Memorandum of Agreement. Paragraph 4 of the Memorandum of Agreement shall be deemed rescinded and of no effect.

5. Reimbursement for Main Replacement. PWD will reimburse PGW for enforced Main relocation in accordance with the percentages identified in Schedule "A" (by type of Main and Prudent Main List priority) and the then current prices for such Main as identified in Schedule "B" for the applicable sizes of Main, calculated as follows:

# of Main work linear feet (Slope Interference Work footage and/or Physical Interference Work) + # of Practical Minimum Work linear feet (not to exceed 15% of enforced footage for each block of a project)

multiplied by
the applicable reimbursement percentage identified on Schedule "A"

multiplied by
the then current applicable prices identified on Schedule "B"
for new pipe for a size no greater than the existing Main.

PWD will not reimburse PGW for new Mains where there were no existing Mains being replaced. The parties further acknowledge and agree that PWD will not reimburse PGW for any incremental betterment to PGW's facilities as part of the enforced Main relocation (e.g., for increasing the pipe size of the relocated Main). In such instance reimbursement will be based upon the applicable unit prices for the existing Main.

6. Reimbursement for Enforced Service Work. PWD will reimburse PGW for Enforced Service Work when the Service was connected to a Main qualifying for reimbursement under this Agreement. Percentage Reimbursement shall be according to Schedule "A"

and Schedule "B" for all sizes and types of Enforced Service Work, calculated as follows:

# of Enforced Services (renewals or reconnects)

multiplied by
the applicable reimbursement percentage from the associated Main as set forth on Schedule "A"

multiplied by
the then current applicable price for a gas service renewal or reconnection as set forth on Schedule "B"

7. Reimbursement for Paving. PWD will pay for the costs of street paving within the limits of its construction projects. PGW will be responsible for its paving costs outside the PWD construction area. PWD will not pay for sidewalk paving, except (i) to the extent such paving cost is already included in the unit costs identified on Schedule "B", or (ii) with respect to individually invoiced projects, and then only and to the same extent the project is reimbursable as a percentage set forth on Schedule "A".

8. Invoicing and Documentation.

1. For any project in which PGW seeks reimbursement hereunder, PGW will submit an invoice for reimbursement to PWD consisting of the following as a minimum:

1. an itemized list of all existing enforced and new relocated PGW gas main footage and unit costs by city block, size, type, whether it is Physical or Slope Interference or Practical Minimum Footage Allowance, etc.; and,

2. an itemized list of all enforced gas services within the limits of enforced gas mains, existing & new service pipe size and material, property address, whether it's a renewal or reconnect, and the unit cost; and,

3. an associated detailed drawing showing the relocated gas main, size, dimensions, the enforced gas services, etc.

Attached as Exhibit "C" is an example of an invoice meeting the criteria set forth above. Invoices shall be submitted to PWD not later than ninety (90) days after project completion. Any undisputed invoice or portion thereof shall be paid by PWD not later than ninety (90) days after receipt.

2. The prices effective for each project shall be those in effect pursuant to Schedule "B" on the date the project is completed.

3. No less frequently than every six (6) months, PGW will provide PWD with an updated Prudent Main List with Mains rank-ordered for replacement priority from 1 through 1,000, with "1" being of the highest priority. Except as required by applicable

law, PWD shall not disclose to any other persons or entities the existence, nature or subject matter of the Prudent Main List, except solely to employees, contractors, or consultants with a need to know.

4. For a period of three (3) years from the completion of any project subject to this Agreement, the parties shall maintain complete records of all books, documents, papers, records, supporting costs, proposals, accounting records, employee time sheets, payroll records, and other documents pertaining to costs incurred in performing the work on the projects that are the subject of this Agreement. In any year of the term, PWD may examine, with PGW's cooperation, the records of up to five (5) individual projects with a value of less than $100,000 each, in order to evaluate whether unit pricing, rather than work order pricing for such projects, is cost effective for PWD. Such examination shall be for informational purposes only.

9. Compliance. The parties shall comply with all applicable federal, state, and local laws, rules, and regulations, either in existence or as may be imposed in the future, including Title 31 U.S. Code § 1352, which prohibits funds from being expended by the recipients or any lower tier sub-recipients of a federal contract grant, loan or cooperative agreement to pay any person for influencing or attempting to influence a federal agency or Congress in connection with the awarding of any federal contract, the making of any federal grant or loan, or the entering into of any cooperative agreement.

10. Choice of Law. This Agreement shall be governed by and construed and enforced in accordance with the laws of the Commonwealth of Pennsylvania, without reference to conflicts of law.

11. Counterparts. This Agreement may be executed by the parties hereto in any number of separate counterparts and all of such counterparts when together shall be deemed to constitute one and the same instrument.

12. Severability. If any provision of this Agreement or the application thereof to any person or circumstances shall to any extent be held invalid, then the remainder of this Agreement or the application of such provision to persons or circumstances other than those as to which it is held invalid shall not be affected thereby, and each provision of this Agreement shall be valid and enforced to the fullest extent permitted by law.

13. Duly Authorized Representative. The signatories to this Agreement are duly authorized to execute this Agreement on behalf of PWD and PGW.

14. Binding Agreement. The respective rights and obligations provided in this Agreement shall bind and shall inure to the benefit of the parties hereto, their legal representatives, successors and assigns.

15. No Waiver. Nothing contained herein shall constitute any commitment, obligation or intent on either party to forebear from exercising it rights and remedies in the event of a default hereunder.

16. No Disclosure. Except as required by applicable law or regulation, the parties agree not to share or disclose this agreement or the terms herein contained with any non-party.

17. Integration. This Agreement contains all the agreements, conditions, understandings, representations and warranties made between the parties hereto with respect to the subject matter hereof for the time periods set forth herein and supersedes all prior negotiations, letter agreements and proposals (either written or oral). This Agreement may not be modified or terminated orally or in any manner other than by an agreement in writing signed by both parties hereto or their respective successors in interest.

18. Further Assurances. The parties agree to execute such further and other documents and instruments and take such further and other actions as may be necessary to carry out and give full effect to the transactions contemplated by this Agreement.

19. Notice. All notices and communications required to be given in writing under this Agreement shall be sent by United States mail, postage prepaid, or delivered by hand delivery with receipt obtained, to the addresses below or at such other addresses as PWD and PGW may designate in writing from time to time.

If intended for PWD:

Brian Mohl, Capital Programs Manager
Philadelphia Water Department
1101 Market Street, 2nd Fl. ARA
Philadelphia, PA 19107

With a copy to:

J. Barry Davis, Esq.
Divisional Deputy City Solicitor
C/o Philadelphia Water Department
1101 Market Street, 5th Fl. ARA
Philadelphia, PA 19107

If intended for PGW:

Mike Jones, P.E.
Philadelphia Gas Works
800 West Montgomery Avenue
Philadelphia, PA 19122

With a copy to:

Abby L. Pozefsky, Esq.
S.V.P. and General Counsel
Philadelphia Gas Works

800 W. Montgomery Ave
4th Floor
Philadelphia, PA 19122

All notices shall be deemed received five (5) calendar days after mailing or upon actual receipt, whichever is earlier.

20. It is understood and agreed that in entering into this Agreement, PFMC does so solely in its capacity as operator and manager of the municipally-owned Philadelphia Gas Works under the Agreement dated December 29, 1972 between PFMC and the City of Philadelphia, as amended from time to time, and not otherwise; and further, that any payments required to be made by PFMC as a result of or arising out of its entering into this Agreement shall be made solely from the revenues of the Philadelphia Gas Works.

IN WITNESS WHEREOF, PGW and PWD have caused this agreement to be executed by their duly authorized representatives as of the date first above written.

PHILADELPHIA FACILITIES MANAGEMENTCORPORATION, in its capacity as operator and manager of Philadelphia Gas Works

Attest:

By: _____
Name: Abby L. Pozefsky
Title: Assistant Secretary

By: _____
Name: Thomas E. Knudsen
Title: President and CEO

Approved:

_____
Romulo L. Diaz, Jr., City Solicitor

THE CITY OF PHILADELPHIA
by and though its WATER DEPARTMENT

By: _____
Name: Bernard Brownstein
Title: Commissioner

SCHEDULE "A"
REIMBURSEMENT CATEGORIES AND PERCENTAGE REIMBURSEMENT

Pipe Type for Main and Associated Service Replacement/ Renewal	PGW Gas Prudent Main List Rank[1]	Physical Interference Work	Slope Interference Work[2]	Practical Min. Footage Allowance [3]
Cast Iron	1-250	0%	0%	0%
" "	251-500	25%	25%	25%
" "	> 500	50%	50%	50%
Ductile Iron	1-250	0%	0%	0%
" "	251-500	25%	25%	25%
" "	> 500	50%	50%	50%
Plastic Main	1-250	0%	0%	0%
" "	251-500	25%	0%	25%
" "	> 500	50%	0%	50%
Unprotected Steel	1-250	0%	0%	0%
" "	251-500	25%	0%	25%
" "	> 500	50%	0%	50%
Cathodically Protected Steel	1-250	0%	0%	0%
" "	251-500	25%	0%	25%
" "	> 500	50%	0%	50%

NOTES:

[1] Prudent Main List rank for a project shall be as of the date that PGW receives a project review request for a project from PWD.

[2] Notwithstanding the chart percentages for Slope Interference Work, **no** reimbursement shall be paid to PGW for Slope Interference Work relating to Main laid after 1976 if PGW re-lays the replacement Main of the same size in the same location.

[3] Notwithstanding the chart percentages for Practical Minimum Footage Allowance Work, the value of such reimbursement may not exceed 15% of the value of the qualifying enforced footage.

SCHEDULE "B"
REIMBURSEMENT PRICING
PGW FY 2004

MAIN PRICING FOR JOBS UNDER $100,000

SIZE	UNIT COST PER LINEAR FOOT
10" and Smaller Low Pressure Mains	$122 Linear Foot
All High Pressure Mains	$180 Linear Foot
12" and Larger Low Pressure Mains	Per individual project work order

MAIN PRICING FOR JOBS $100,000 AND OVER

SIZE	UNIT COST PER LINEAR FOOT
10" and Smaller Low Pressure Mains	Per individual project work order
All High Pressure Mains	Per individual project work order
12" and Larger Low Pressure Mains	Per individual project work order

SERVICE RENEWALS/REPLACEMENTS PRICING FOR JOBS UNDER $100,000

SIZE	UNIT COST
1.25" and smaller	$1557
2" and greater	$8733

SERVICE RENEWALS/REPLACEMENTS PRICING FOR JOBS OVER $100,000

SIZE	UNIT COST
1.25" and smaller	Per individual project work order
2" and greater	Per individual project work order

The parties acknowledge that with the exception of individual work orders, the prices listed above are derived from PGW's Capital Budget. Accordingly, this Schedule "B" shall be deemed to be automatically amended from time to time to reflect currently approved unit prices for the foregoing categories in PGW's current Capital Budget (as approved by the Philadelphia Gas Commission). Such changes shall be valid and applicable each year during the term for projects completed during that PGW Fiscal Year (i.e., September 1 to August 31). The parties acknowledge that unit prices shall be effective for the entire applicable PGW fiscal year, notwithstanding the actual approval date of the Capital Budget.

SCHEDULE "C"
SAMPLE INVOICE WITH ATTACHMENTS

SEWER STRUCTURE

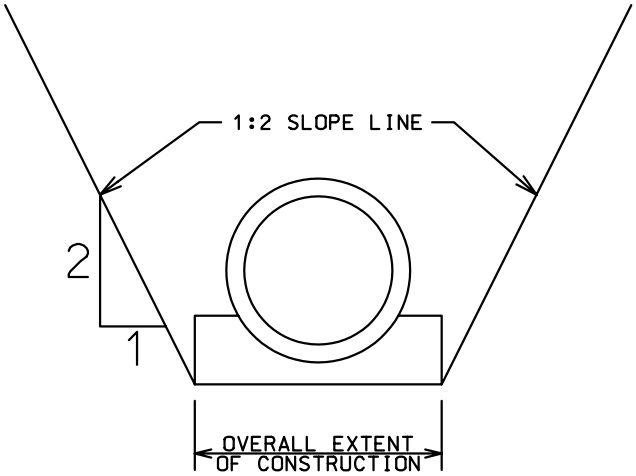

WATER MAIN

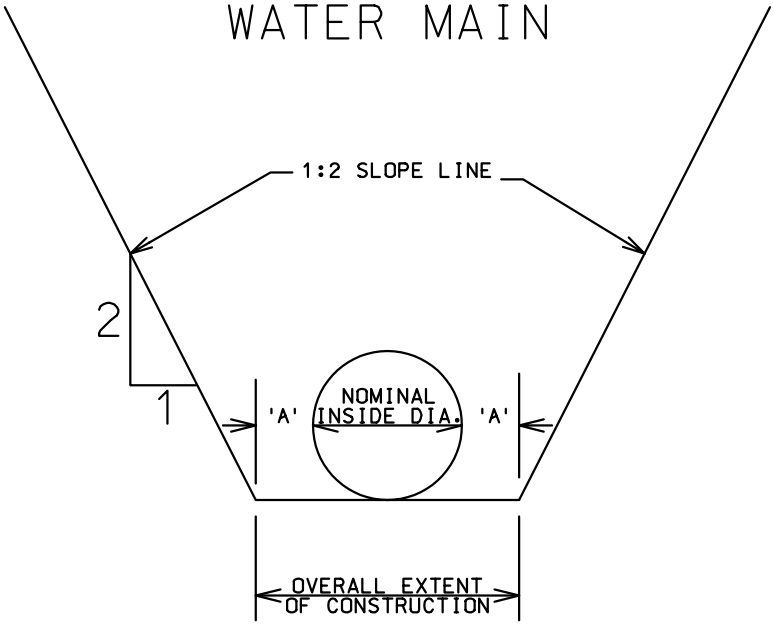

NOMINAL INSIDE DIA.	'A'
6″ DIA. & LESS	6″
OVER 6″ DIA. & LESS THAN 24″ DIA.	8″
24″ DIA. & OVER	12″

FIGURE 1

T.K. 2-16-2011

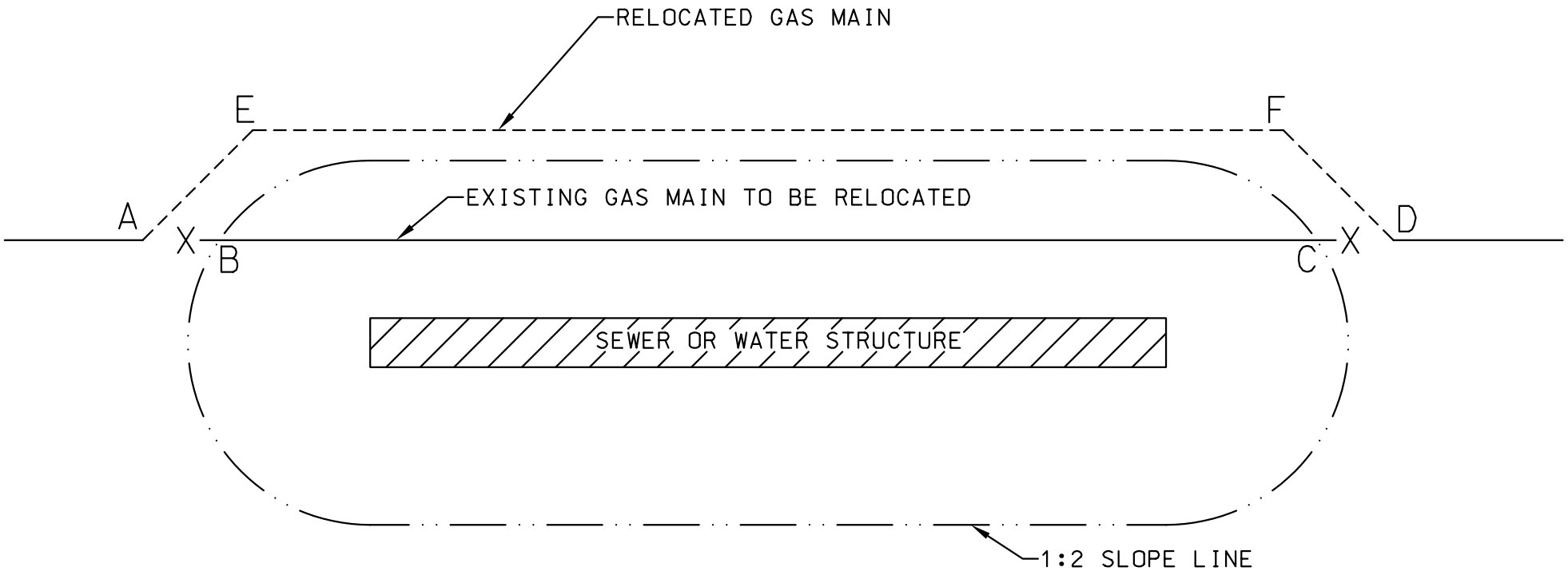

POINTS (A) AND (D) AND DISTANCE (AEFD) TO BE SUCH AS TO GIVE
THE PRACTICAL MINIMUM FOOTAGE AS GOVERNED BY LOCAL PHYSICAL CONDITIONS

FIGURE 2

T.K. 2-16-2011

Full Width Reconstruction Roadway Grading Plan Procedure

1. Survey and Base Plan

1.1. Contact City Surveyor to get an established Control Point (Bench Mark)

1.2. Obtain elevation shots for the entire block at 25 foot stationing from the P.I. to the P.I. as well as at the P.C.'s and the Houseline of the perpendicular street. At each location there should be seven (7) elevation shots generating a cross section of the street. These shots consist of the following:

- Houseline or protruding property feature such as steps or window wells (both sides)
- Top of curb (both sides)
- Gutter (both sides)
- Centerline

1.3. In addition to the shots taken at the 25 foot station intervals, survey shots shall also be taken at above ground property protrusions into the footway such as steps, window wells, cellar doors etc. The shots taken at these points shall consist of:

- Edge of property feature where it intersects with the footway. In the case of steps, the shots would be taken at the bottom step where it intersects with the footway. (relevant side)
- Top of curb (relevant side)
- Gutter (relevant sides)

2. Design Parameters

2.1 The target range for footway cross slopes is 1 - 3%.

- In many circumstances existing footway slopes exceed this limit. Raising the curb elevations would be the first preference to achieve an adequate cross slope in order to avoid noticeable changes at the building/house line. Any adjustments at the houseline or steps shall be minimal and within building code and may be subject to consent of the property owner.
- Where there are localized areas where a 3% slope is exceeded even after raising the curb, the designer shall discuss and obtain consensus with Jack Betanski. Also, areas with less than a 1% slope will need to be discussed with Jack Betanski.

2.2. The roadway designer shall work closely with Jack Betanski in regards to the number of allowable breaks in the curb slope along a block. The goal is to raise the curb along the block so that the footway cross slopes in front of the majority of the properties are within the 1 - 3% range without creating an unsightly street appearance due to excessive breaks in the curb slope.

2.3. The grade of the top of curb and gutter shall be the same. Gutter-line grade shall not be less than 0.5%.

2.4. Roadway design layout shall be presented as per the sample Roadway Grading Plan.

2.5. The demarcation point between the roadway design and the ramp design shall be approx. 15 feet from the houseline of the perpendicular streets. Grading within the 15 foot transition zone (shown as shaded on the Roadway Grading Plan) will be addressed on the ramp design plans under a separate submission to Streets.

3. Submission and Approval

3.1 After the design is complete, submit the proposed Roadway Grading Plan to Jack Betanski for review and approval. The submission shall consist of:

- CAD file in AutoCAD 2012 format
- PDF of the proposed plan

3.2 Upon approval, the designer should forward a mylar print of the approved Roadway Grading Plan to Jack Betanski for signature. Revise the signature block on the sample plan from District Surveyor to Streets Department. The signed mylar plan will be returned to the designer for inclusion into the final project plan set.

3.3 Design of ADA ramps shall not be incorporated into the Roadway Grading Plan package. These will be handled under a separate submission and review process to the Streets Department.

Back to Appendix IV

Instructions for Filling in the Pre-EPS Submission Checklist

The Pre-EPS Submission Checklist is shown on pages 2 through 5 of this Appendix IVi. However, when filling in the checklist you should use the Form Fill PDF from the home page of the website under Working Sheets and Forms, Appendix IVi. Do not put two State Routes on one checklist. A separate checklist is required for each State Route.

The **applicant** is always PWD. The Job # is the 5 digit PWD Job number without the prefix or suffix. The Business Partner ID (BPID) for PWD is 006697.

For both submittals, the **Project Contact** is the PWD Project Engineer assigned to the job. The Engineer/Designer is the PWD Project Engineer or the Project Engineer for the consultant. The Business Partner ID (BPID) doesn't have to be filled in.

The **Project Location** is the street location(s) in the State Routes only. **Permit Type** is the type of work being performed in the state route, any of which apply, Water, Sewer, Storm (Green included), ADA, etc.

For the **Work Summary**, write a short description of the work to be performed in the State Route. (eg: Water Main Relay, Stormwater Trench, ADA Ramps, etc) To find State Route segments and offsets, go to the PENNDOT videolog at http://www.dot7.state.pa.us/videolog/. Select one of the ways to locate the state route. (The remainder of these instructions will assume Street Name was selected) Input Philadelphia County (County 67) at the bottom of the county list (alternatively type Phi into the field and Philadelphia will come up). Select the State Route being worked on, zoom in on the map and navigate to the area of work. The image that appears is a photo taken at that point. If it is a 2 way street, the button on the right under the image will switch the view direction. Use the arrows below the image to move to a point where the start of construction can be easily seen in the photo. If you are off a little is is ok so long as you can clearly see the starting point. PennDOT just wants to see what the area looks like. Note the segment and offset in the information to the right of the image, write these numbers in for the start segment and offset. Navigate to the end of the construction and repeat the previous steps for the end segment. For additional help with using videolog, the videolog has a help page in the upper right of the webpage, which is accessible by clicking on the question mark.

For **Fees**, only work in the state routes should be counted. Calculate the fees as stated. When the proposed work is located in an intersection of a State Highway and a City Street, the State Highway shall extend up to the projected curb lines of the State Highway.

For **Attachments**, the submission will always be done by the applicant, which is PWD. To change the selection on the yes/no questions in the PDF, drag the circles over the correct selection for the project. For the location map use a PDF of the Contract Plan with the work area inside of the State Route highlighted with a red box drawn around it.

For the **ADA Ramps** affected, leave these lines blank for the 70% submittal of this form. After receiving the paving letter with the ramp locations from the Streets Department, prepare an additional checklist for ADA ramps only (for the work summary write ADA Ramps). See Section 6 D.6.b for information on that procedure.

GPIS will always be Yes. If you do not have access to the GPIS system, you should ask PWD for the GPIS number.

Overlay information should be left blank on the 70% submittal. PennDOT's review letter will let you know if an overlay will be required.

The number of work days can vary depending on many circumstances. However, as a rule of thumb, with no extenuating circumstance, use 21 ft/day for a water relay, 12 ft/day for sewer reconstruction, 5 days per ADA ramp, and xxx ft/day for a tree trench. These numbers should be adjusted to account for individual job conditions. {117}

Back to Appendix IV

PROJECT DETAILS

Applicant: _____ BPID: _____

_____ Job #: _____

FOR DEPARTMENT USE ONLY

_____ Prelim Job#: _____

Project Contact: _____

Phone & Email: _____

Engineer/Designer: _____ BPID: _____

Phone & Email: _____

Project Location: _____

Permit Type (water, gas, storm sewer etc): _____

WORK SUMMARY AND LOCATION

Work Summary (1): _____

State Route (1) (Number and name): _____

Start Segment and offset (use video log for assistance): _____

End Segment and offset (use video log for assistance): _____

Work Summary (2): _____

State Route (2) (Number and name): _____

Start Segment and offset (use video log for assistance): _____

End Segment and offset (use video log for assistance): _____

Work Summary (3): _____

State Route (3) (Number and name): _____

Start Segment and offset (use video log for assistance): _____

End Segment and offset (use video log for assistance): _____

FEES

Is project for a government political subdivision / authority / agency: Y / N

Is opening < 100 Feet in length in State Right of Way (including sidewalk): Y / N

If both above are Y, no permit fee is required. If either is N, permit fees are required

Permit Application Fee: $ 50

Inspection fee:

*Number of openings 100 feet in length in pavement: _____ @ $ 40 each = $ _____

*Number of openings 100 feet in length in footway: _____ @ $ 10 each = $ _____

Total fee (application fee + inspection fee): _____

*openings in the State Right-of-Way

ATTACHMENTS

Is EPS submission being done by the: APPLICANT or DESIGN CONSULTANT

Is work in the State Right-of Way highlighted on the design plans: Y / N

ADA (Curb Cut) Ramps affected Y / N

If ADA (Curb Cuts) are involved, provide ADA job Numbers

PennDOT: _____ City: _____

Other:

_____

_____

_____

City of Philadelphia GPIS permit obtained Y / N

If Yes, provide GPIS Number: _____

City of Philadelphia Street Closure permit obtained Y / N

MPT

Can work be done under traffic and without a detour Y / N

Publication PATA 213 figures that would be appropriate for this project

- 101 - Short Term Conventional Highway - Work space on or beyond the shoulder (no roadway encroachment)
- 102 - Short Term Conventional Highway - Work space on or beyond the shoulder (minor roadway encroachment)
- 103 - Short Term Conventional Highway - Work space has a major encroachment on the roadway
- 128 - Short Term Conventional Highway - Sidewalk closure; pedestrian diversion
- 129 - Short Term Conventional Highway - Sidewalk closure; pedestrian diversion

OTHER

Will this project require an overlay Y / N

Approximate limits of the overlay _____

_____

FOR DEPARTMENT USE ONLY

Is a Department paving project forthcoming	Y / N

Inspection Estimate

A) Approximate number of work days (within State Right-of-Way): _____

FOR DEPARTMENT USE ONLY

B) Approximate inspector hours per work day: _____

C) Inspector Hourly Rate: _____

D) Approximate inspector miles per work day: _____

E) Inspector Mileage Rate: _____

F) Estimated increase due to more involved operations: _____

Approximate Inspection {(A*B)*C)+(A*D)*E)+F}: _____

ADDITIONAL NOTES

_____

_____

_____

_____

_____

_____

_____

_____

REFERENCE PLANS AND INFORMATION

Appendix V

a – Preferred Inlet Locations
b – Inlet Pictures
c – Upper End Vent Pipe Picture
d – Drainage Plat Map*
e – Water Plat Map*
f – 1907 Standard Details for Sewers
g – Streets Department Survey Districts*
h – Highway Districts*
i – State Highway Route Numbers (List)
j – State Highway Route Numbers (Map)*
k – Wards*
*Link to Google Earth KML Reference File

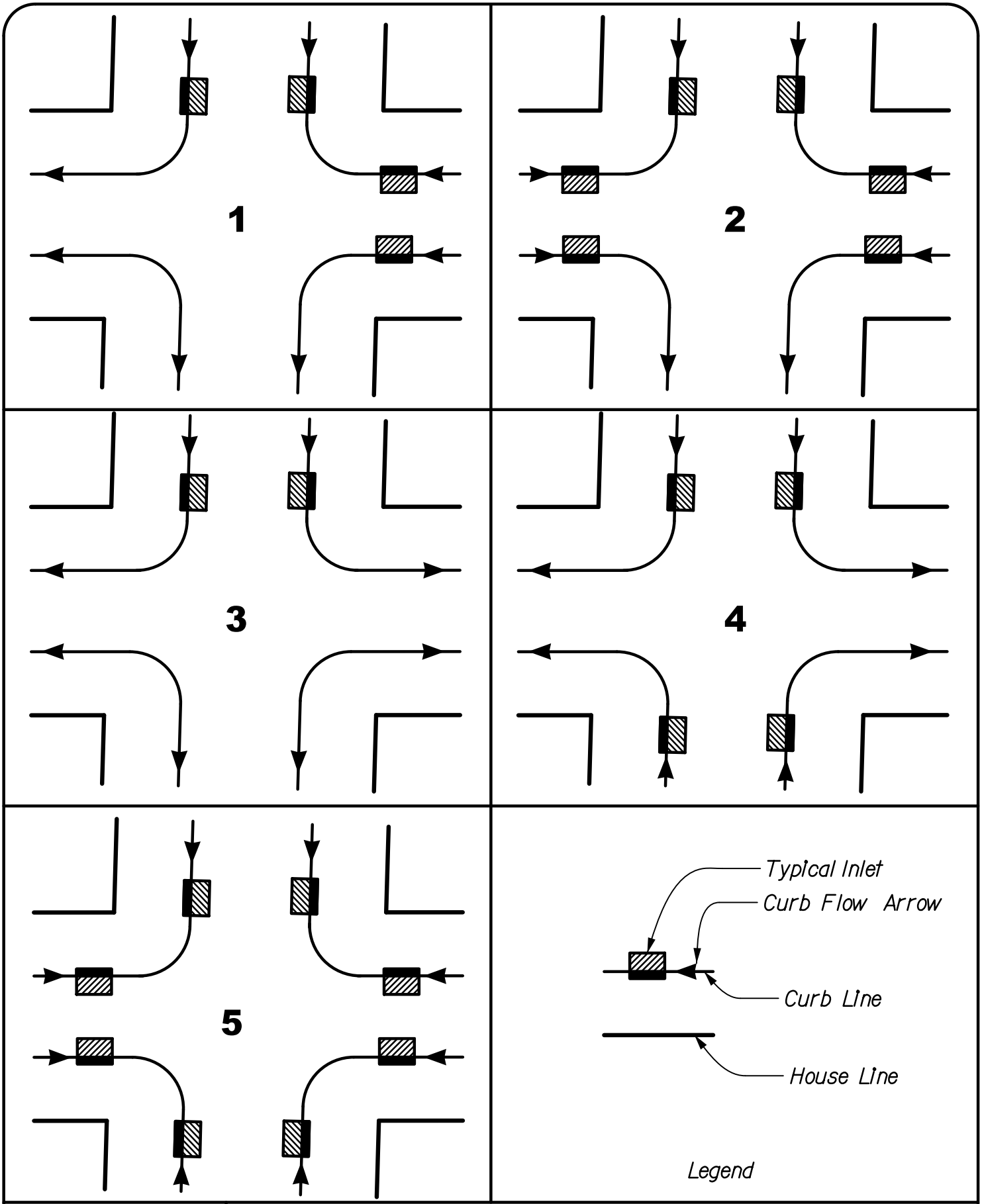

Philadelphia Water Department

APPENDIX 5a
Preferred Inlet Locations

{69} {83}

Back to Appendix V

CHECKED BY: FM	DATE: 01/15/2014	PAGE NO. 1 OF 1

INLET PICTURES
TABLE OF CONTENTS

4' OPEN MOUTH GRATE INLET	1
6' OPEN MOUTH GRATE INLET	2
4' CITY INLET	3
6' CITY INLET	4
4' OPEN MOUTH INLET	5
4' HIGHWAY GRATE INLET	6
6' HIGHWAY GRATE INLET	7
#1 CITY INLET WITH ROUND CLEAN-OUT COVERS	8
#1 CITY INLET WITH RECTANGULAR CLEAN-OUT COVERS	9
#2 CITY INLET WITH ROUND CLEAN-OUT COVERS	10
#2 CITY INLET WITH RECTANGULAR CLEAN-OUT COVERS	11
#3 CITY INLET WITH ROUND CLEAN-OUT COVERS	12
#3 CITY INLET WITH RECTANGULAR CLEAN-OUT COVERS	13
#4 CITY INLET WITH RECTANGULAR CLEAN-OUT COVERS	14
#1 GRATE INLET	15
#2 GRATE INLET	16
#3 GRATE INLET	17
#4 GRATE INLET	18

Philadelphia Water Department

Back to Appendix V

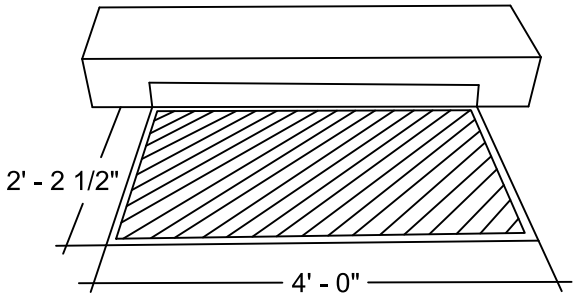

4' OPEN MOUTH GRATE INLET

Philadelphia Water Department

DATE	8/19/14
CHECKED BY	FM
PAGE No	1 OF 18

INLET SYMBOL FOR EXISTING INLET AS SHOWN ON PLAN SHEETS.

SEE APPENDIX II k FOR PROPOSED INLET SYMBOL.

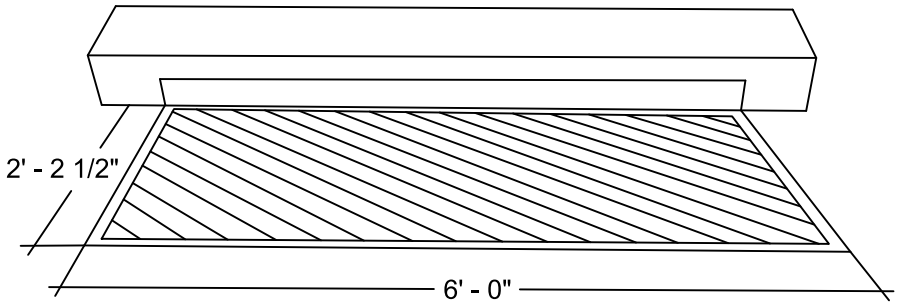

6' OPEN MOUTH GRATE INLET

Philadelphia Water Department

DATE	8/19/14
CHECKED BY	FM
PAGE No	2 OF 18

INLET SYMBOL FOR EXISTING INLET AS SHOWN ON PLAN SHEETS.

SEE APPENDIX II k FOR PROPOSED INLET SYMBOL.

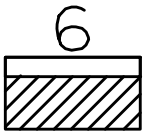

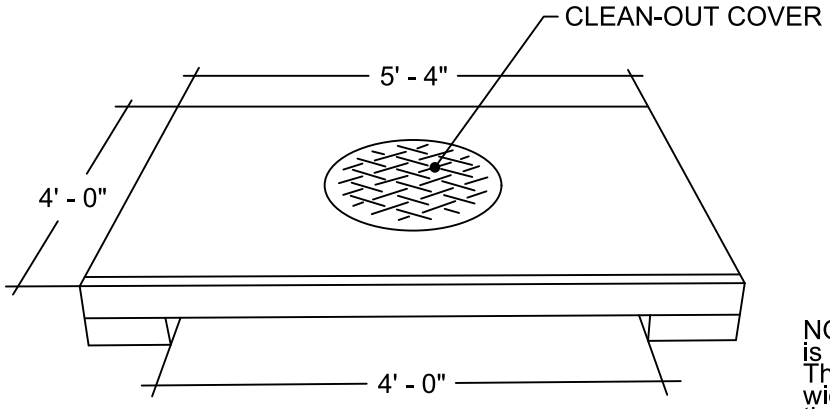

NOTE: Inlet wall is behind the curb. This causes an 8" wide throat between the top slab and the inlet wall.

4' CITY INLET

Philadelphia Water Department

DATE 9/22/14	INLET SYMBOL FOR EXISTING INLET AS SHOWN ON PLAN SHEETS.
CHECKED BY FM	SEE APPENDIX II k FOR PROPOSED INLET SYMBOL.
PAGE No 3 OF 18	4CI

NOTE: Inlet wall is behind the curb. This causes an 8" wide throat between the top slab and the inlet wall.

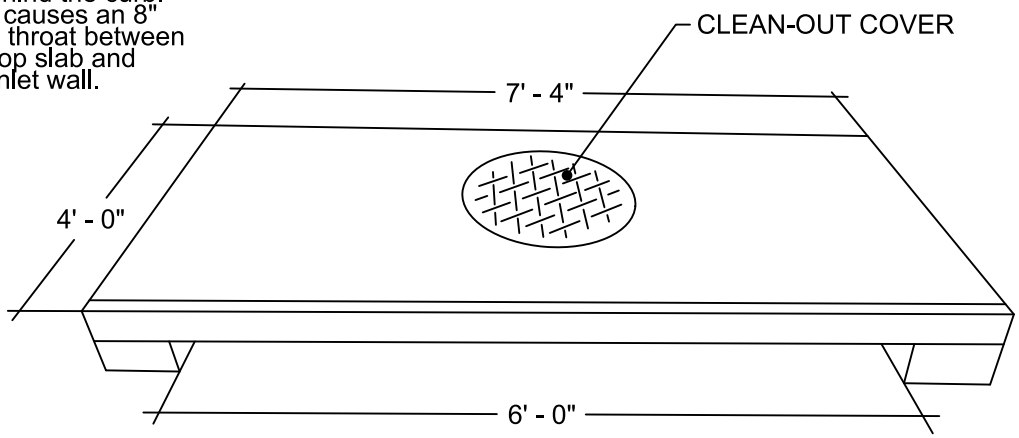

6' CITY INLET

Philadelphia Water Department

DATE	10/30/14
CHECKED BY	FM
PAGE No	4 OF 18

INLET SYMBOL FOR EXISTING INLET AS SHOWN ON PLAN SHEETS.

SEE APPENDIX II k FOR PROPOSED INLET SYMBOL.

6CI

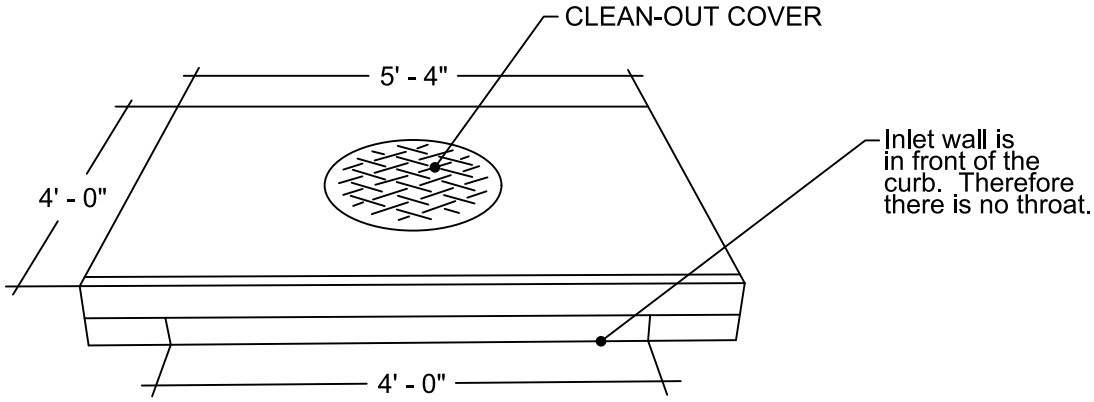

4' OPEN MOUTH INLET

Philadelphia Water Department

DATE 9/22/14	INLET SYMBOL FOR EXISTING INLET AS SHOWN ON PLAN SHEETS.
CHECKED BY FM	SEE APPENDIX II k FOR PROPOSED INLET SYMBOL.
PAGE No 5 OF 18	40M

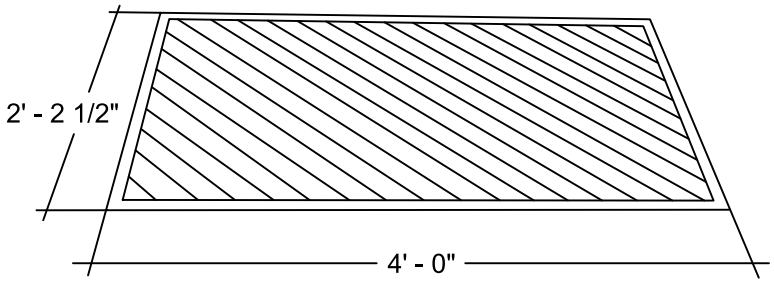

4' HIGHWAY GRATE INLET

Philadelphia Water Department

DATE 8/19/14	INLET SYMBOL FOR EXISTING INLET AS SHOWN ON PLAN SHEETS.
CHECKED BY FM	SEE APPENDIX II k FOR PROPOSED INLET SYMBOL.
PAGE No 6 OF 18	4

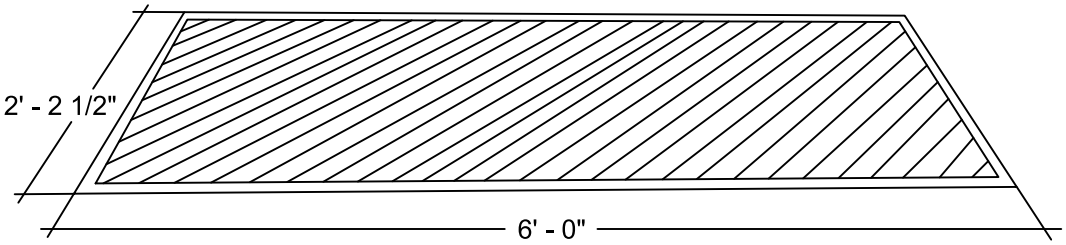

6' HIGHWAY GRATE INLET

Philadelphia Water Department

DATE 8/19/14	INLET SYMBOL FOR EXISTING INLET AS SHOWN ON PLAN SHEETS.
CHECKED BY FM	SEE APPENDIX II k FOR PROPOSED INLET SYMBOL.
PAGE No 7 OF 18	6

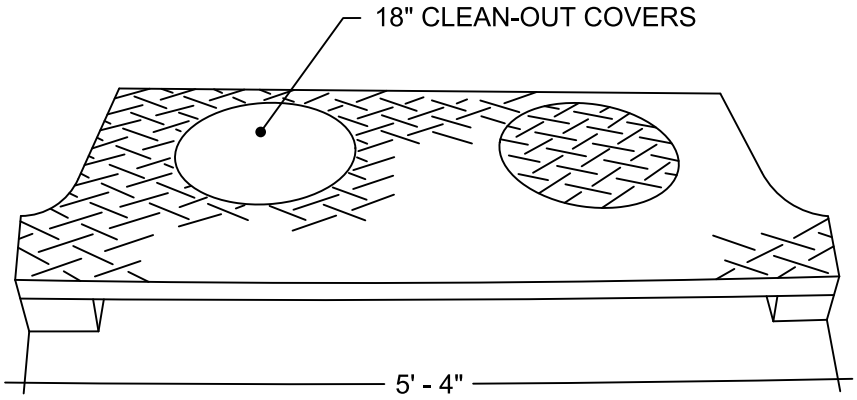

#1 CITY INLET
WITH ROUND CLEAN-OUT COVERS

Philadelphia Water Department

DATE 11/20/14	INLET SYMBOL FOR EXISTING INLET AS SHOWN ON PLAN SHEETS.
CHECKED BY FM	
PAGE No 8 OF 18	#1

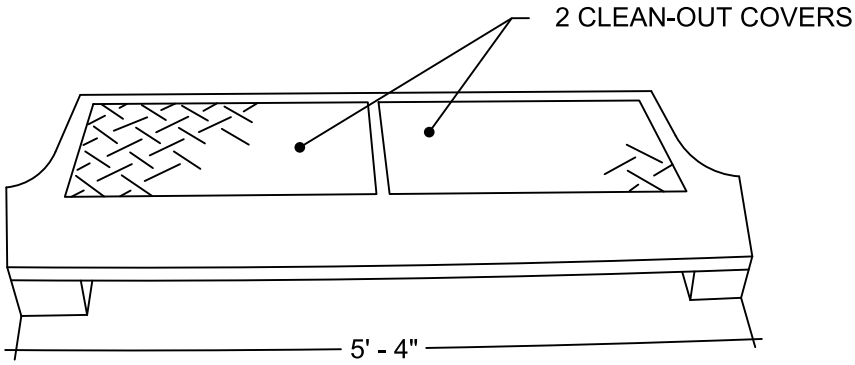

#1 CITY INLET
WITH RECTANGULAR CLEAN-OUT COVERS

Philadelphia Water Department

DATE 11/20/14	INLET SYMBOL FOR EXISTING INLET AS SHOWN ON PLAN SHEETS.
CHECKED BY FM	
PAGE No 9 OF 18	#1

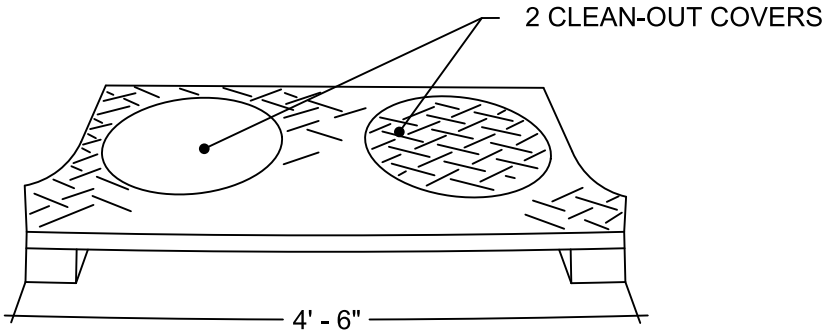

#2 CITY INLET
WITH ROUND CLEAN-OUT COVERS

Philadelphia Water Department

DATE 11/20/14	INLET SYMBOL FOR EXISTING INLET AS SHOWN ON PLAN SHEETS.
CHECKED BY FM	
PAGE No 10 OF 18	#2

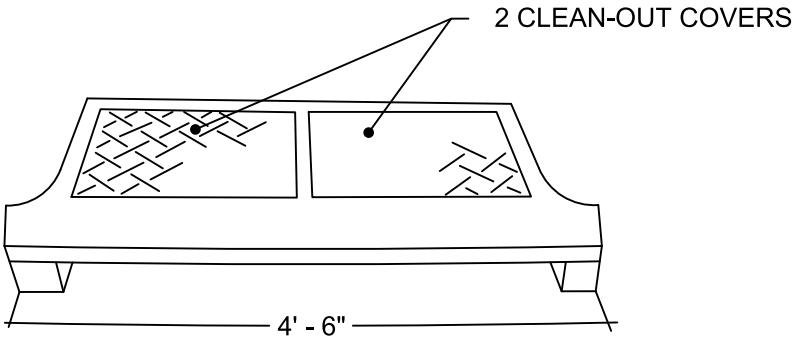

#2 CITY INLET
WITH RECTANGULAR CLEAN-OUT COVERS

Philadelphia Water Department

DATE 11/20/14	INLET SYMBOL FOR EXISTING INLET AS SHOWN ON PLAN SHEETS.
CHECKED BY FM	
PAGE No 11 OF 18	#2

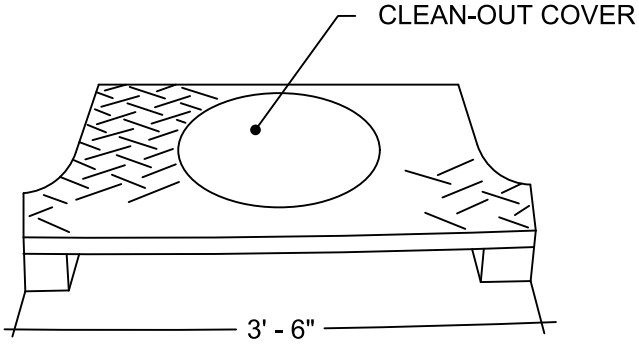

#3 CITY INLET
WITH ROUND CLEAN-OUT COVERS

Philadelphia Water Department

DATE 11/20/14	INLET SYMBOL FOR EXISTING INLET AS SHOWN ON PLAN SHEETS.
CHECKED BY FM	
PAGE No 12 OF 18	#3

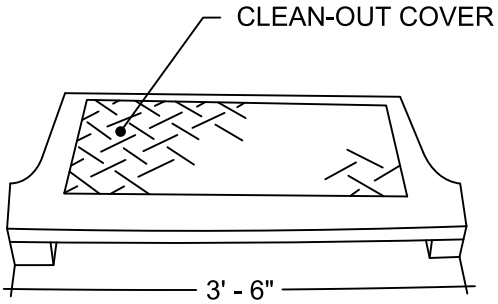

#3 CITY INLET
WITH RECTANGULAR CLEAN-OUT COVERS

Philadelphia Water Department

DATE 11/20/14	INLET SYMBOL FOR EXISTING INLET AS SHOWN ON PLAN SHEETS.
CHECKED BY FM	
PAGE No 13 OF 18	#3

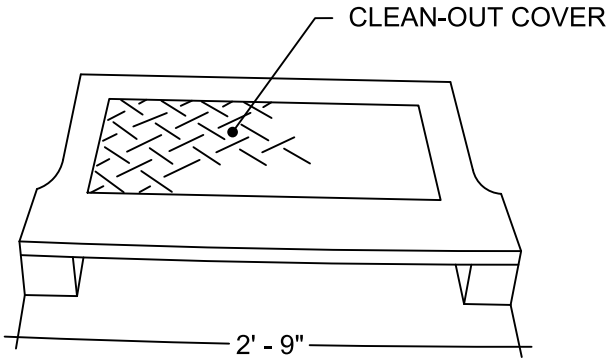

#4 CITY INLET
WITH RECTANGULAR CLEAN-OUT COVERS

Philadelphia Water Department

DATE 11/20/14	INLET SYMBOL FOR EXISTING INLET AS SHOWN ON PLAN SHEETS.
CHECKED BY FM	
PAGE No 14 OF 18	#4

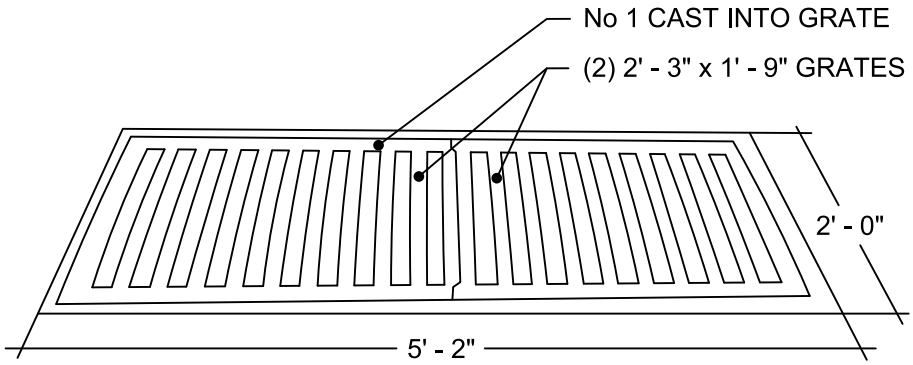

#1 GRATE INLET

Philadelphia Water Department

DATE 11/20/14	INLET SYMBOL FOR EXISTING INLET AS SHOWN ON PLAN SHEETS.
CHECKED BY FM	
PAGE No 15 OF 18	#1

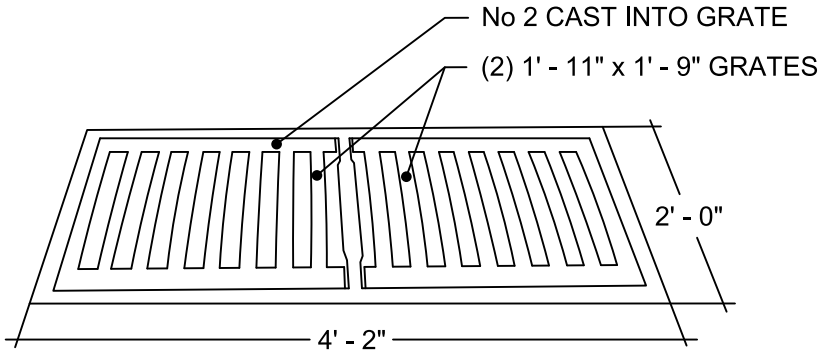

#2 GRATE INLET

Philadelphia Water Department

DATE 11/20/14	INLET SYMBOL FOR EXISTING INLET AS SHOWN ON PLAN SHEETS.
CHECKED BY FM	
PAGE No 16 OF 18	#2

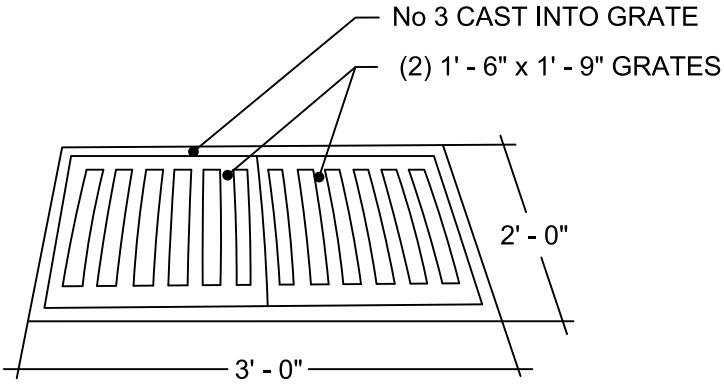

#3 GRATE INLET

DATE 11/20/14	INLET SYMBOL FOR EXISTING INLET AS SHOWN ON PLAN SHEETS.
CHECKED BY FM	
PAGE No 17 OF 18	#3

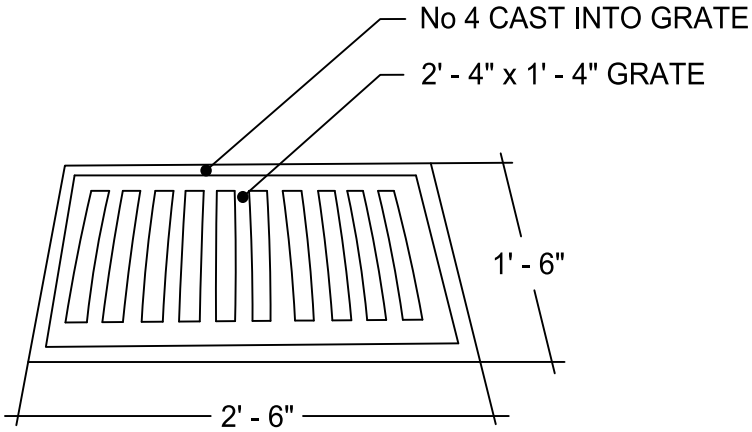

#4 GRATE INLET

DATE 11/20/14	INLET SYMBOL FOR EXISTING INLET AS SHOWN ON PLAN SHEETS.
CHECKED BY FM	
PAGE No 18 OF 18	#4

SEWER PLATS

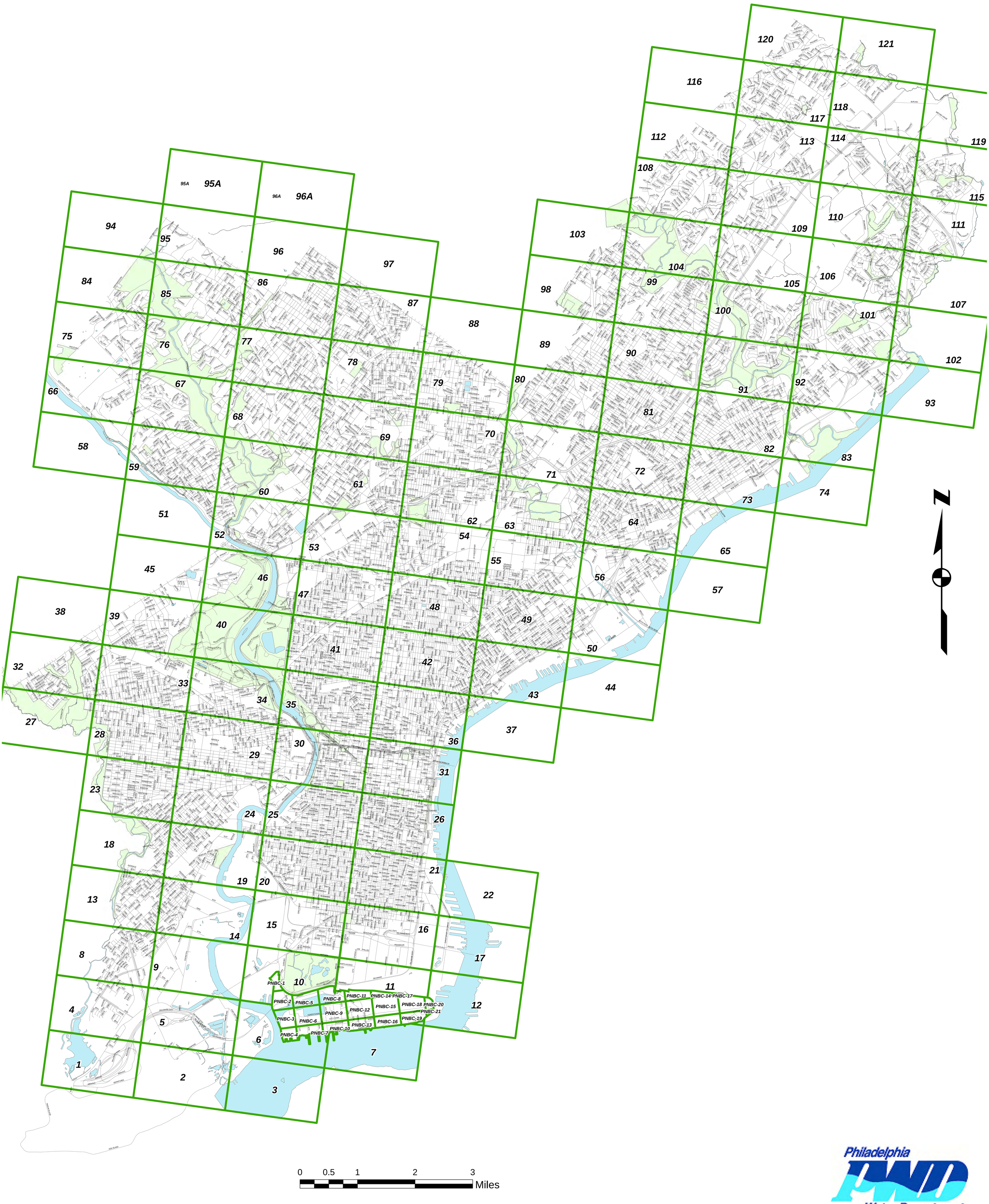

APPENDIX Vd Back to Appendix V

WATER PLATES

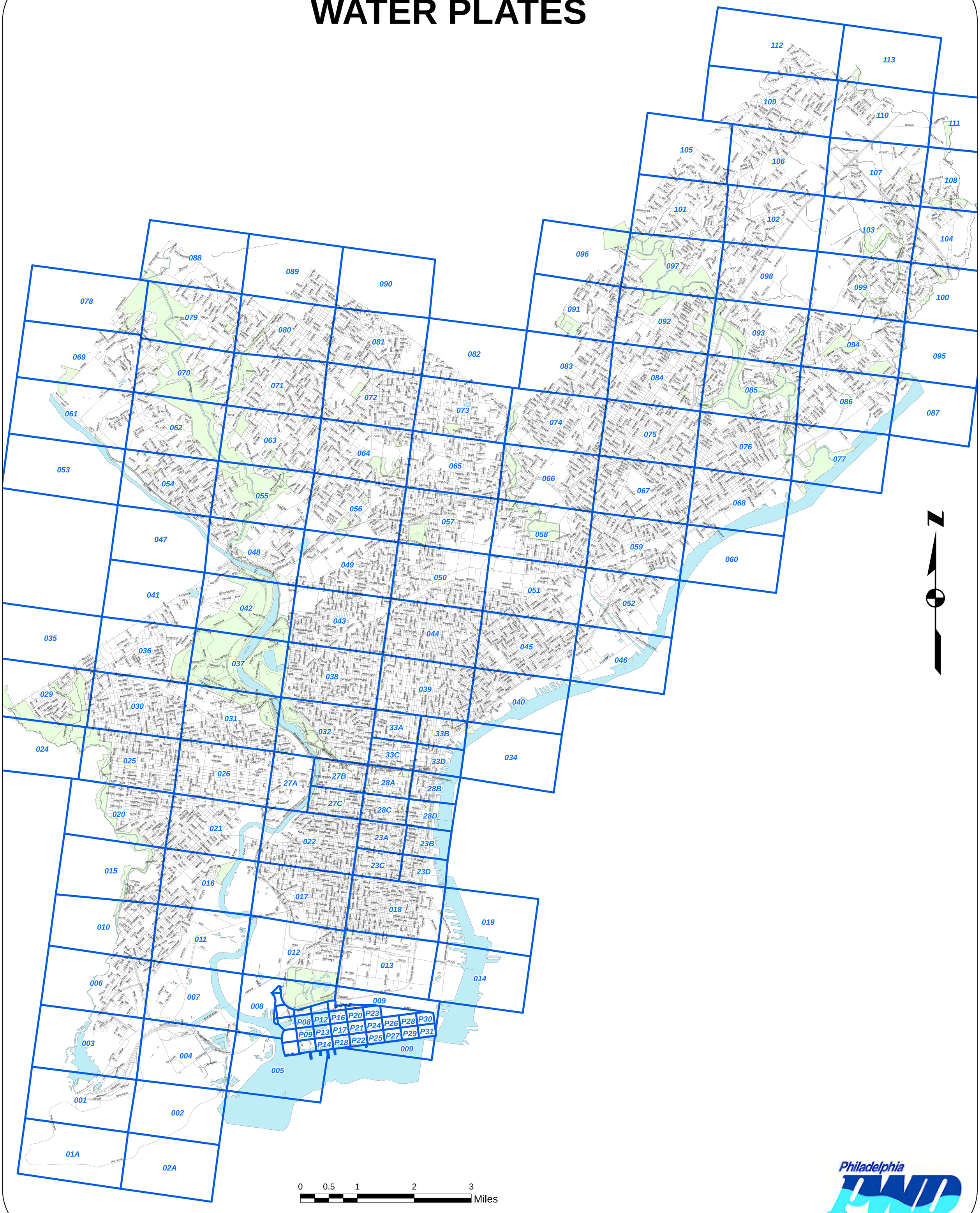

APPENDIX Ve Back to Appendix V

Philadelphia Water Department

A. Haltman

A.F. Burbidge 795A

STANDARD DETAILS

FOR

SEWERS

DEPARTMENT OF PUBLIC WORKS

Bureau of Surveys

PHILADELPHIA

1907

GEORGE S. WEBSTER,
CHIEF ENGINEER.

The 1907 Standard Details for Sewers shows typical old brick sewer design. An index has been added for your convenience. Page numbers have also been added to replace the original roman numerals. Since brick sewer design did not change, these standard details should be all that is needed. However, if you need other standard details, the following years are available @ phillywaterdesign.org: 1902, 1905, 1907, 1925, 1934, 1947, 1956, 1970, and 1985.

Also, the handwritten signatures on this cover page probably belonged to the original men that used this book. If you know the history of these men please submit it on the comment page and we will try to share it.

1907 Sewer Detail Table of Contents

1. 2’-0” & 2’-3” Dia.
2. 2’-6” & 2’-9” Dia.
3. 3’-0” & 3’-6” Dia.
4. 4’-0” & 4’-3” Dia.
5. 4’-6” Dia.
6. 4’-9” Dia.
7. 2’-3”x1’-6” & 2’-6”x1’-8” Egg
8. 3’-0”x2’-0” & 3’-3”x2’-2” Egg
9. 3’-6”x2’-4” & 4’-0”x2’-8” Egg
10. 4’-6”x3’-0” & 5’-0”x3’-4” Egg
11. General Sections for Separate System
12. Manhole and General Details for Vit Pipe Sewers
13. Manhole for Junctions
14. General Details for Egg Shaped Sewers
15. Standard Wellhole Details
16. Cast Iron Manhole Cover & Frame
17. Asphaltum Filled Cast Iron Manhole Covers & Frames
18. Standard Manhole Bucket
19. No. 1 Open Mouth Inlet
20. No. 2 & 3 Open Mouth Inlet
21. No. 4 Open Mouth Inlet
22. Details of Castings for No. 2 & 3 Open Mouth Inlets
23. No. 1, 2 & 3 Grate Top
24. No. 4 Grate Top
25. No. 1 Inlet Design for Grate Top
26. No. 2 Inlet Design for Grate Top
27. No. 3 Inlet Design for Grate Top
28. Country Road Inlet No. 3B

GENERAL SECTIONS OF CIRCULAR SEWERS

Scale

DEPARTMENT OF PUBLIC WORKS
BUREAU OF SURVEYS
PHILADELPHIA
1906

Chief Engineer

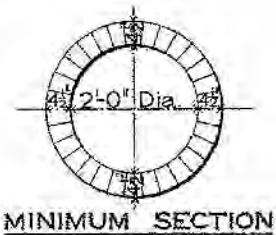

MINIMUM SECTION

All Slants for Inlet connections to be 15" dia. for Nº1 and Nº2 Inlets, 12" dia. for Nº3 Inlets, and 8" dia. for Nº4 Inlets.

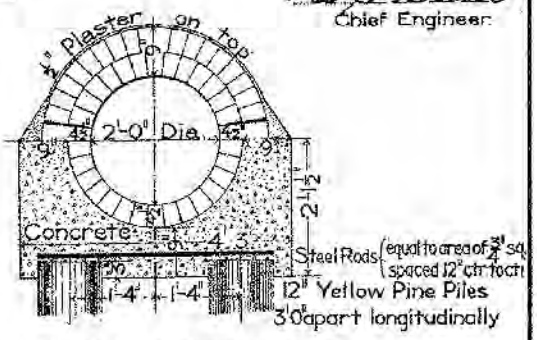

SECTION IN REDUCED CRADLE

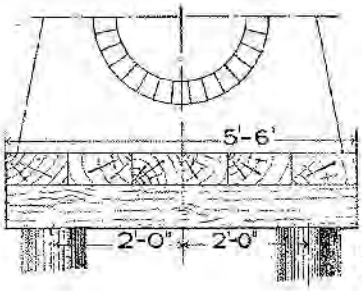

VITRIFIED SHALE BRICK INVERT

6" Yellow Pine Planking laid close
8"×8" Yellow Pine Stringers 3'0" apart longitudinally
12" Yellow Pine Piles 3'-0" apart longitudinally.

SECTION SHOWING PLATFORM and PILES

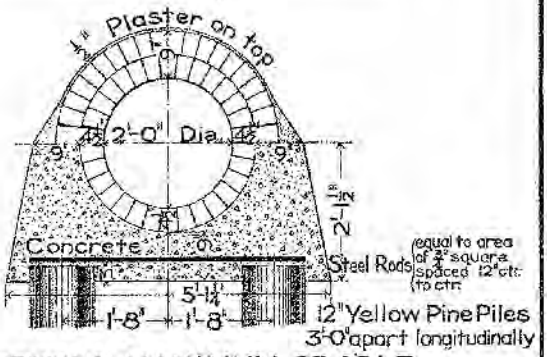

SECTION IN MAXIMUM CRADLE

Steel Rods (equal to area of 3/4" square), and Piles, or Piles and Platform, if required, will be paid for at the price in the contract when ordered by the Chief Engineer.

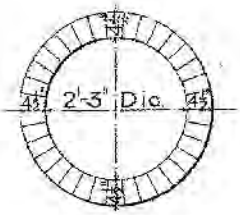

MINIMUM SECTION

Filling over top of Sewer to be at least 3 feet deep and with a slope not less than 1½ ft. horizontal over 1 ft. vertical extending to the surface of the ground.

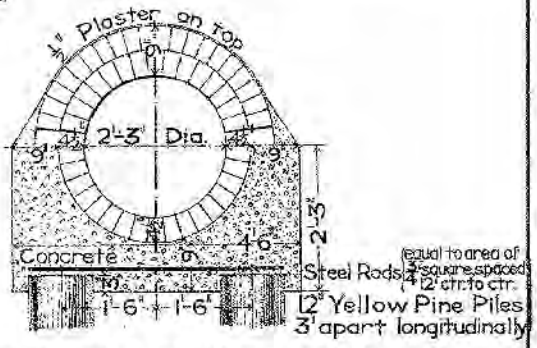

SECTION IN REDUCED CRADLE

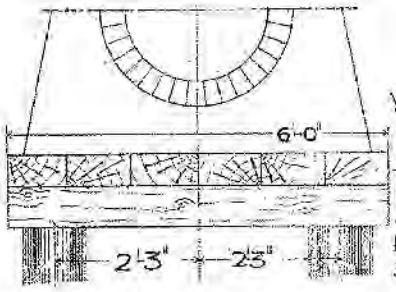

VITRIFIED SHALE BRICK INVERT

6" Yellow Pine Planking laid close
8"×8" Yellow Pine Stringers 3'-0" apart longitudinally
12" Yellow Pine Piles 3'-0" apart longitudinally

SECTION SHOWING PLATFORM and PILES

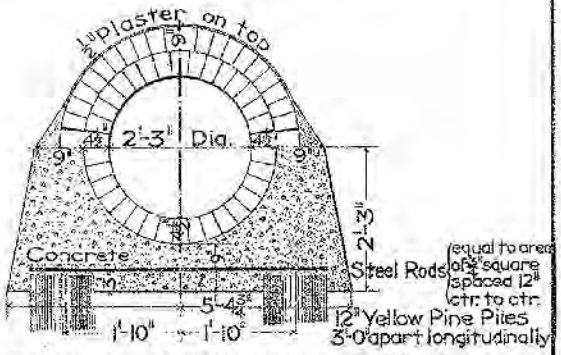

SECTION IN MAXIMUM CRADLE

GENERAL SECTIONS OF CIRCULAR SEWERS

DEPARTMENT OF PUBLIC WORKS
BUREAU OF SURVEYS
PHILADELPHIA
1906

Chief Engineer

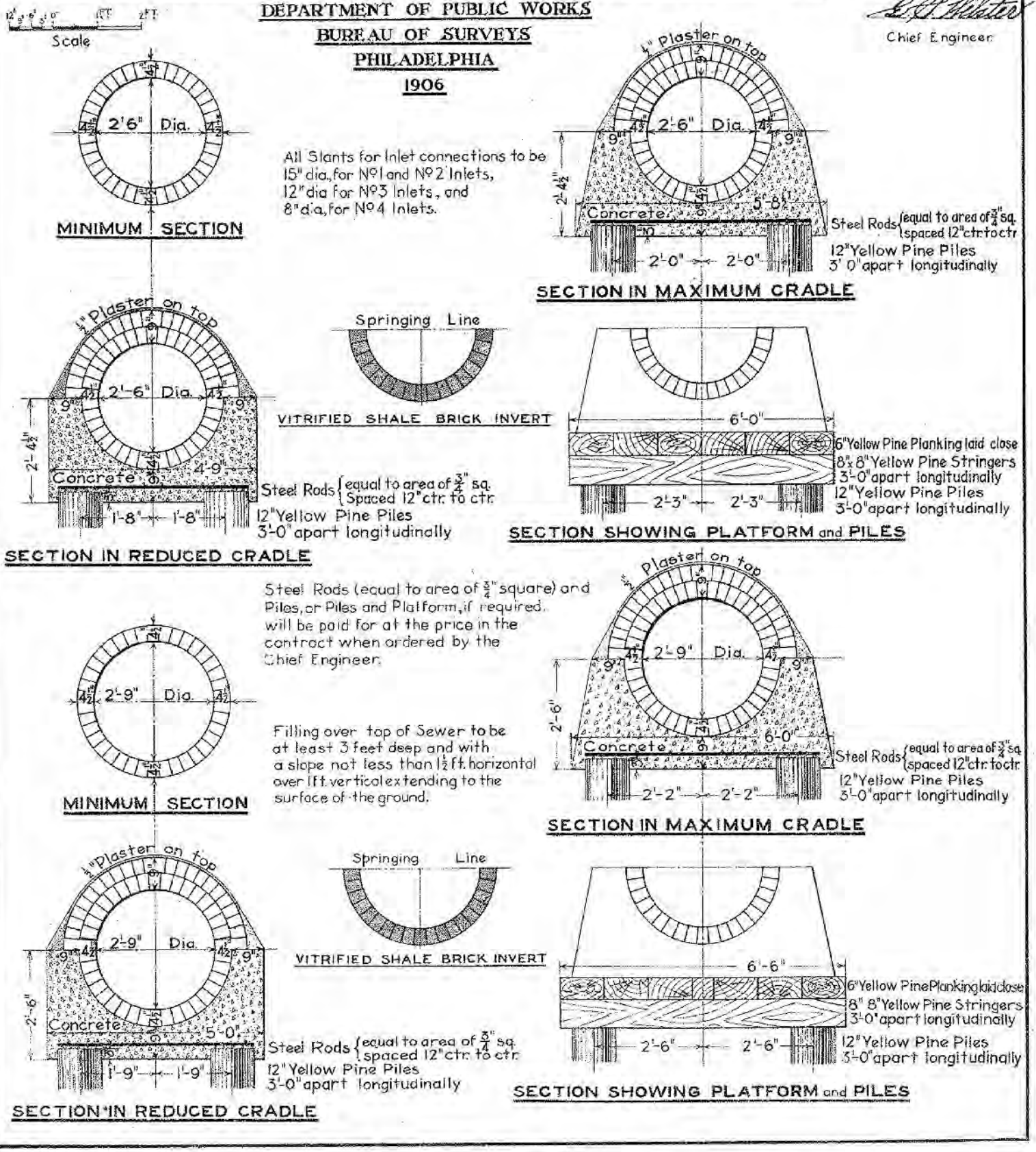

Back to Appendix Vf Table of Contents

GENERAL SECTIONS OF CIRCULAR SEWERS

DEPARTMENT OF PUBLIC WORKS
BUREAU OF SURVEYS
PHILADELPHIA
1906

Scale

Chief Engineer

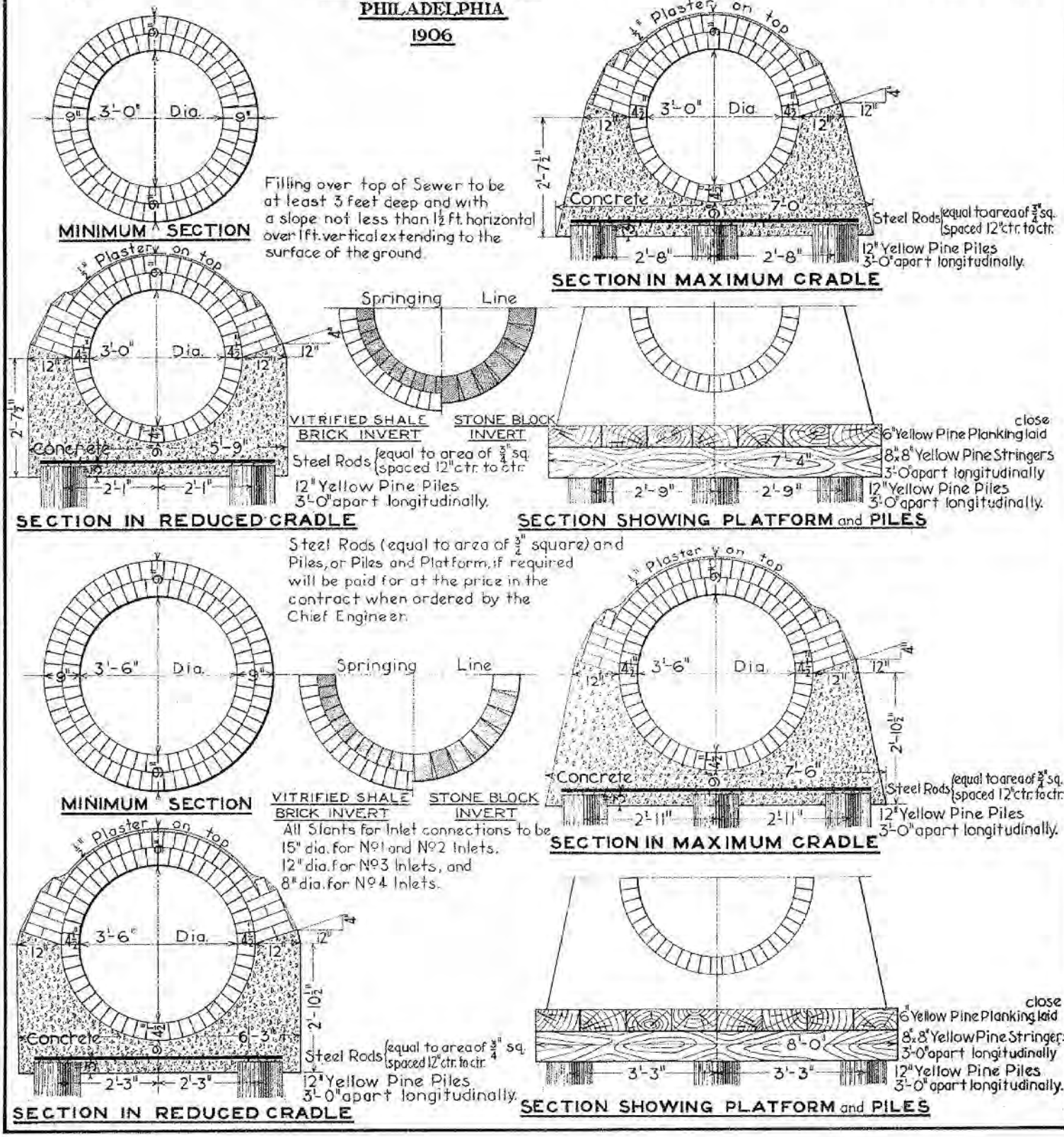

GENERAL SECTIONS OF CIRCULAR SEWERS

DEPARTMENT OF PUBLIC WORKS
BUREAU OF SURVEYS
PHILADELPHIA
1906

Scale

Chief Engineer

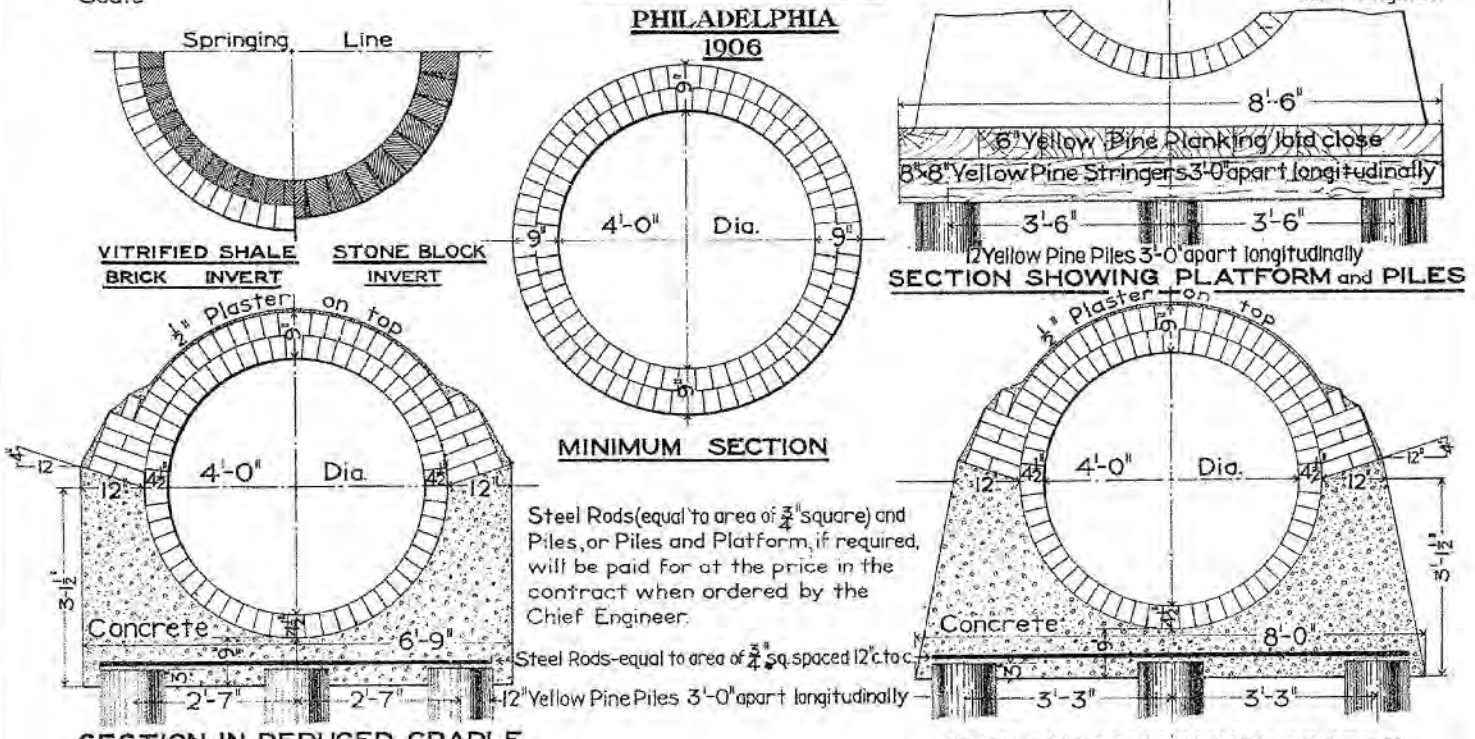

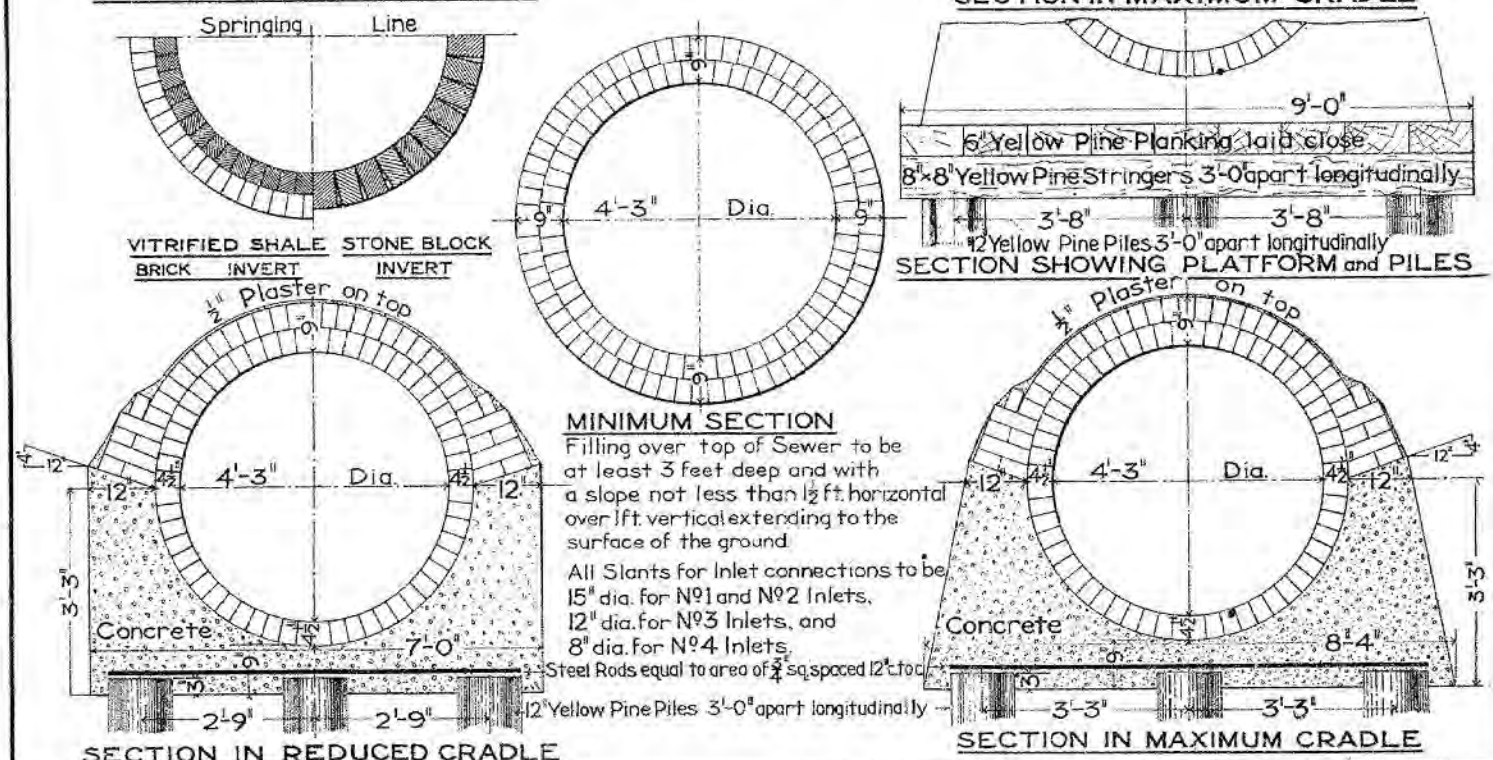

GENERAL SECTIONS OF CIRCULAR SEWERS

Scale

DEPARTMENT OF PUBLIC WORKS
BUREAU OF SURVEYS
PHILADELPHIA
1906

Chief Engineer

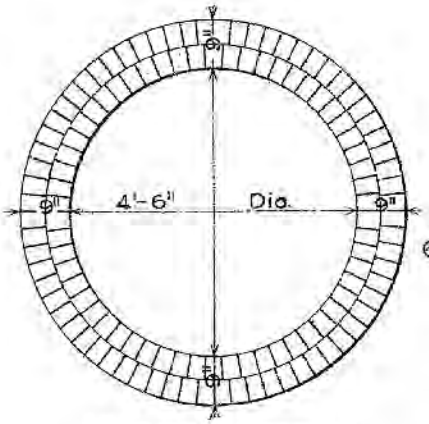

MINIMUM SECTION

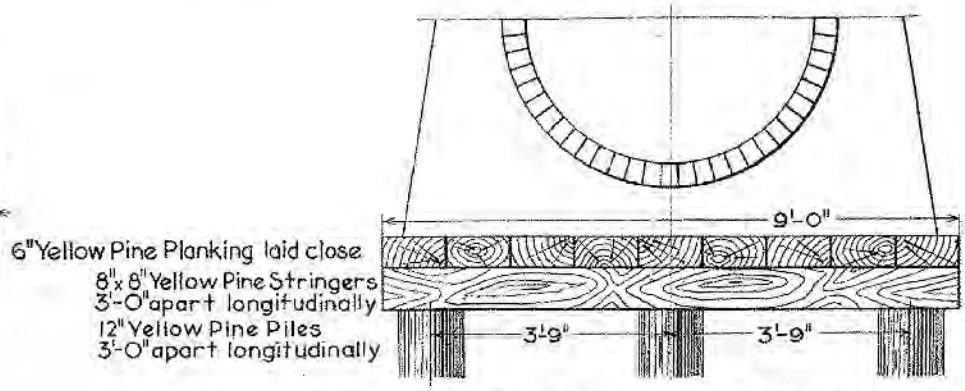

SECTION SHOWING PLATFORM and PILES

Filling over top of Sewer to be at least 3 feet deep and with a slope not less than 1½ ft. horizontal over 1 ft. vertical extending to the surface of the ground.

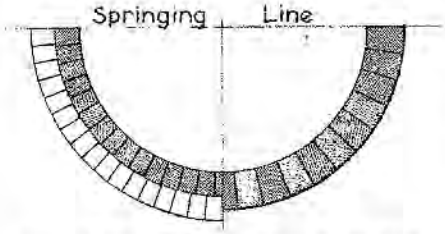

VITRIFIED SHALE BRICK INVERT

STONE BLOCK INVERT

Steel Rods (equal to area of ¾" square) and Piles, or Piles and Platform, if required, will be paid for at the price in the contract when ordered by the Chief Engineer.

All Slants for Inlet connections to be 15" dia. for No 1 and No 2 Inlets, 12" dia. for No 3 Inlets, and 8" dia. for No 4 Inlets.

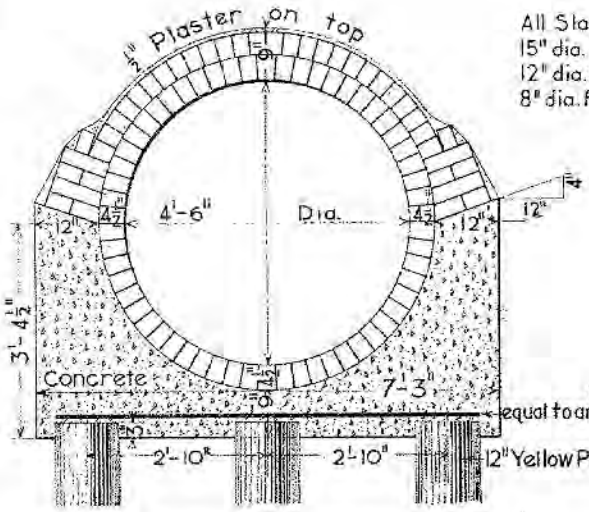

SECTION IN REDUCED CRADLE

Steel Rods equal to area of ¾" sq. spaced 12" ctr. to ctr.

12" Yellow Pine Piles 3'-0" apart longitudinally

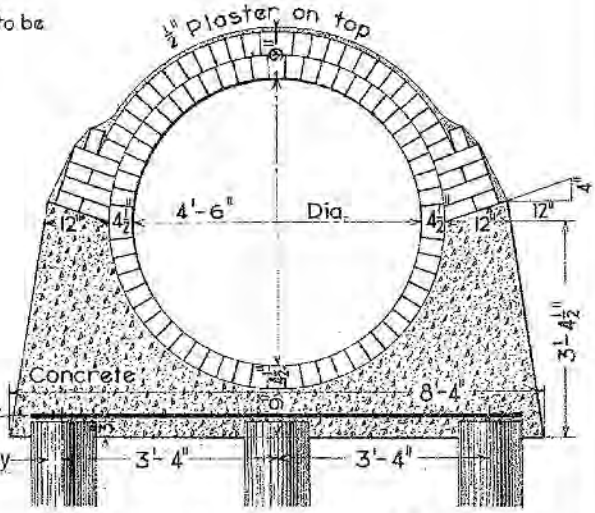

SECTION IN MAXIMUM CRADLE

GENERAL SECTIONS OF CIRCULAR SEWERS

Scale

DEPARTMENT OF PUBLIC WORKS
BUREAU OF SURVEYS
PHILADELPHIA
1906

Chief Engineer

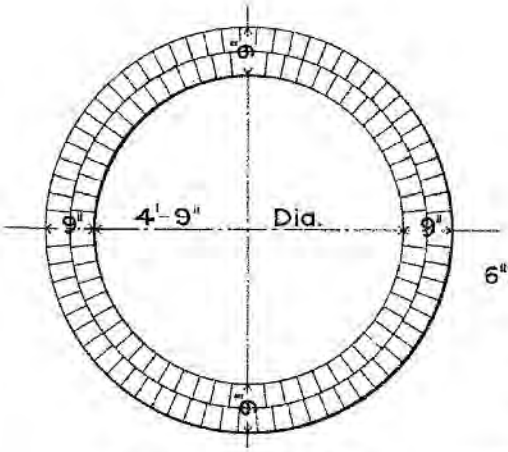

MINIMUM SECTION

Filling over top of Sewer to be at least 3 Feet deep and with a slope not less than 1½ ft. horizontal over 1 ft. vertical, extending to the surface of the ground.

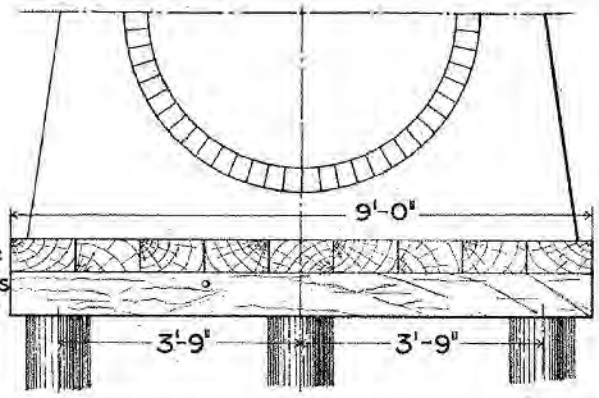

SECTION SHOWING PLATFORM and PILES

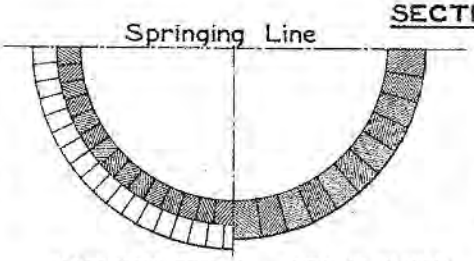

VITRIFIED SHALE BRICK INVERT

STONE BLOCK INVERT

Steel Rods (equal to area of ¾" square) and Piles, or Piles and Platform, if required, will be paid for at the price in the contract when ordered by the Chief Engineer.

All Slants for Inlet connections to be
15" dia. for Nº1 and Nº2 Inlets.
12" dia. for Nº3 Inlets, and
8" dia. for Nº4 Inlets.

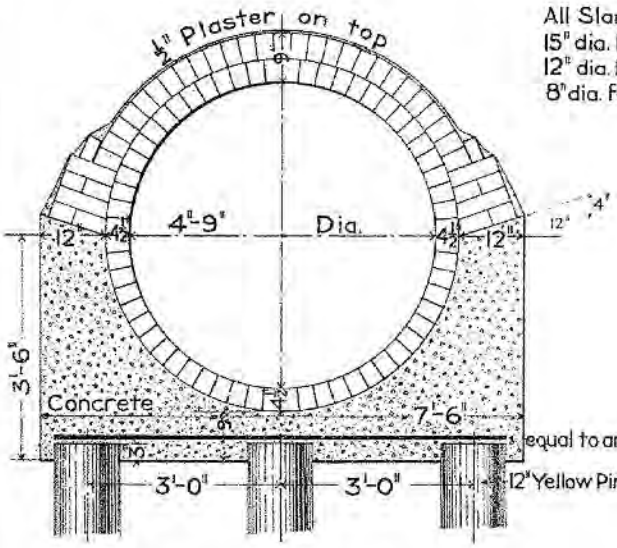

SECTION IN REDUCED CRADLE

Steel Rods equal to area of ¾" sq. spaced 12" c. to c.

12" Yellow Pine Piles 3'-0" apart longitudinally

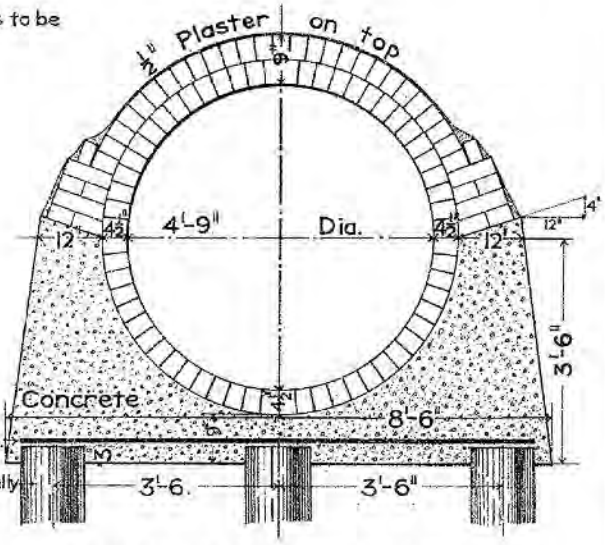

SECTION IN MAXIMUM CRADLE

GENERAL SECTIONS OF EGG-SHAPED SEWERS

DEPARTMENT OF PUBLIC WORKS
BUREAU OF SURVEYS
PHILADELPHIA
1906

Chief Engineer

Scale

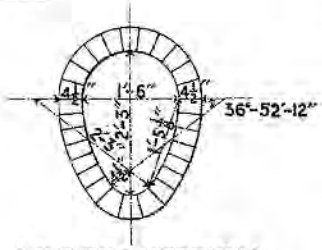

MINIMUM SECTION

All Slants for Inlet Connections to be 15" dia. for No 1 and No 2 Inlets, 12" dia. for No 3 Inlets, and 8" dia. for No 4 Inlets.

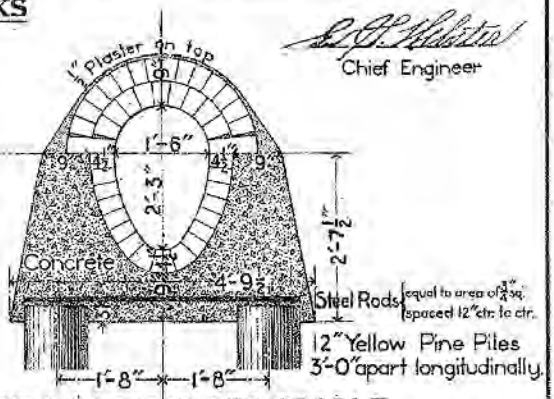

SECTION IN MAXIMUM CRADLE

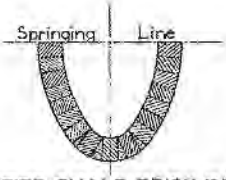

VITRIFIED SHALE BRICK INVERT.

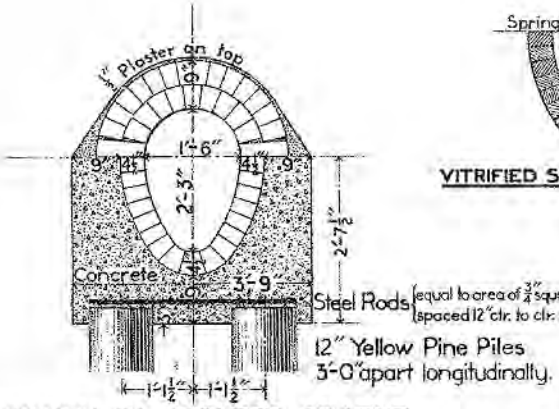

SECTION IN REDUCED CRADLE

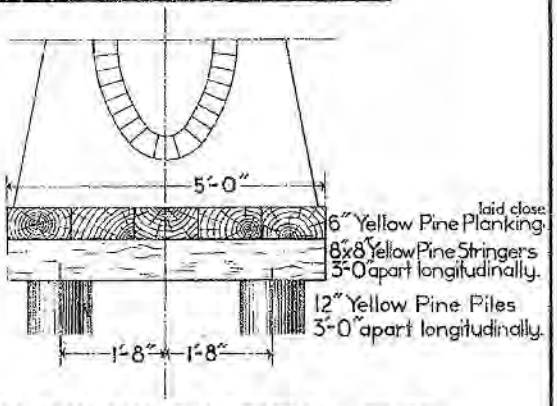

SECTION SHOWING PLATFORM AND PILES

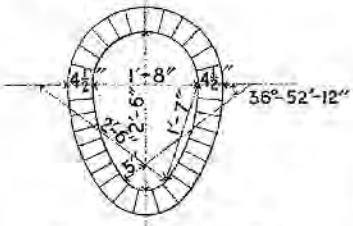

MINIMUM SECTION

Steel Rods (equal to area of ¾" square) and Piles, or Piles and Platform, if required, will be paid for at the price in the contract when ordered by the Chief Engineer.

Filling over top of Sewer to be at least 3 feet deep and with a slope not less than 1½ ft. horizontal over 1 ft. vertical, extending to the surface of the ground.

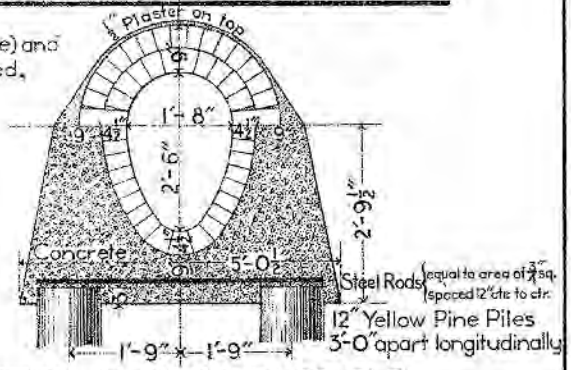

SECTION IN MAXIMUM CRADLE

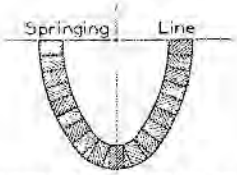

VITRIFIED SHALE BRICK INVERT

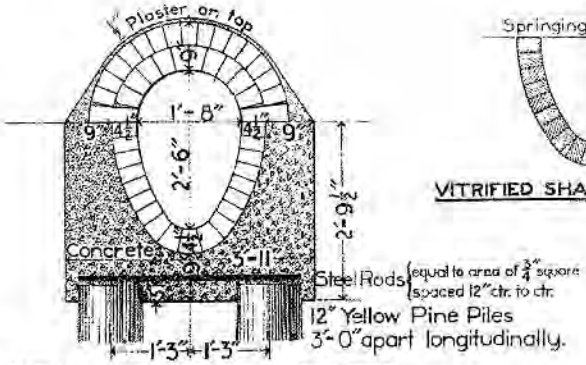

SECTION IN REDUCED CRADLE

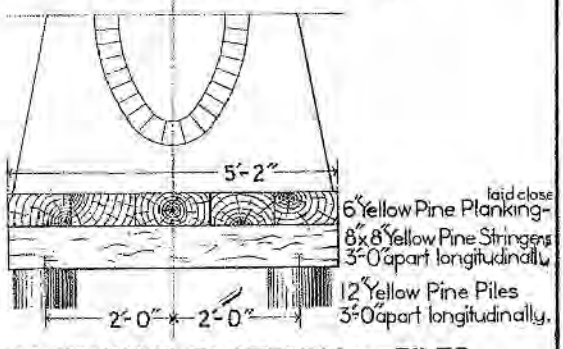

SECTION SHOWING PLATFORM AND PILES

GENERAL SECTIONS OF EGG-SHAPED SEWERS

DEPARTMENT OF PUBLIC WORKS
BUREAU OF SURVEYS
PHILADELPHIA
1906

L. A. Webster
Chief Engineer

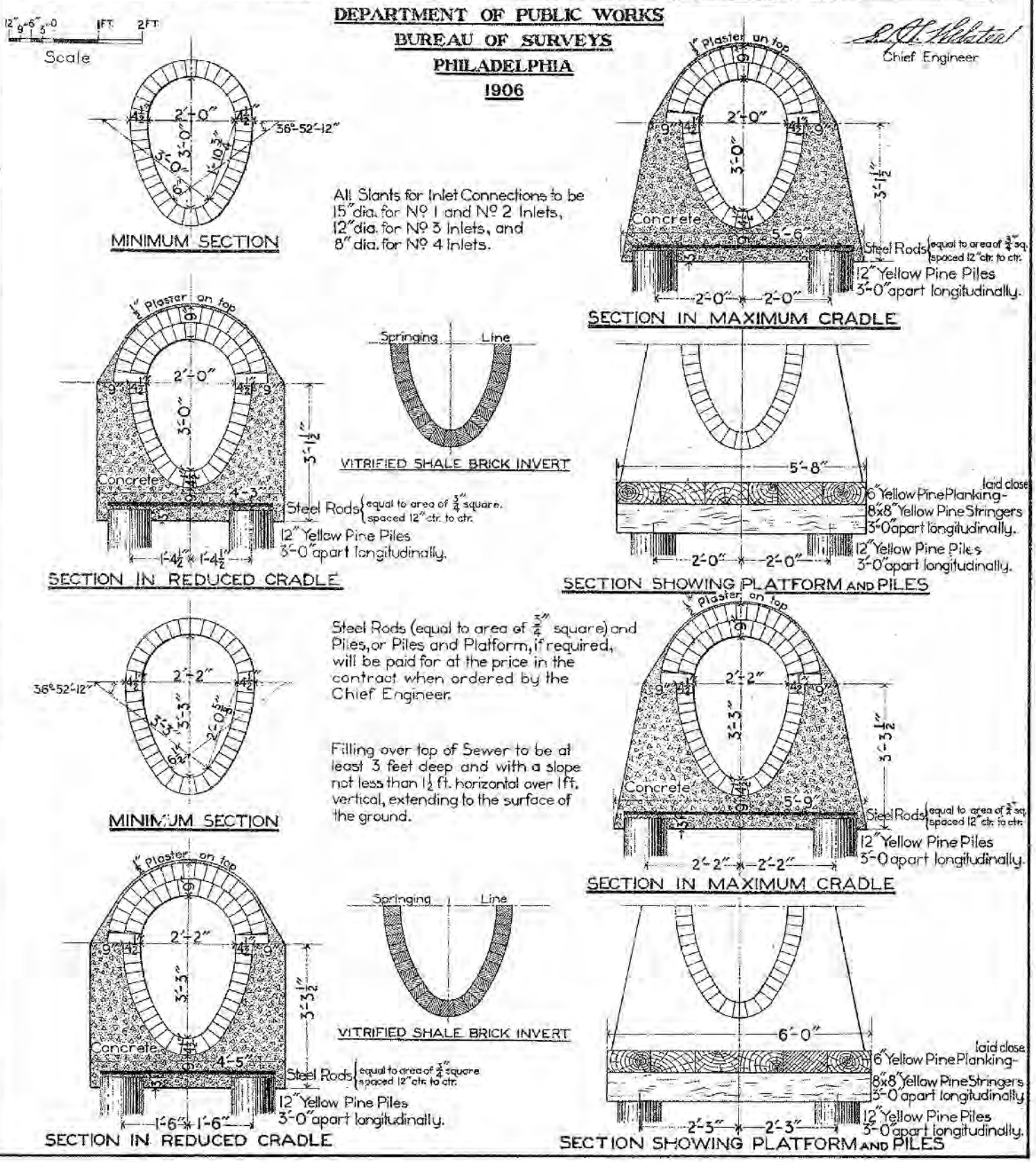

GENERAL SECTIONS OF EGG-SHAPED SEWERS

DEPARTMENT OF PUBLIC WORKS
BUREAU OF SURVEYS
PHILADELPHIA
1906

Chief Engineer

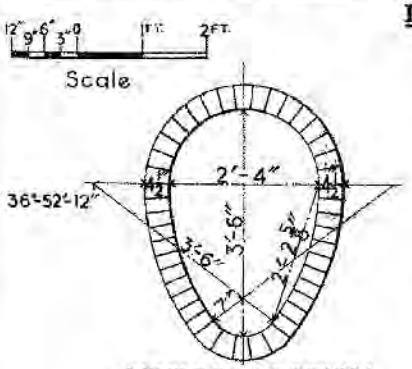

MINIMUM SECTION

All Slants for Inlet Connections to be 15" dia. for No 1 and No 2 Inlets, 12" dia. for No 3 Inlets, and 8" dia. for No 4 Inlets.

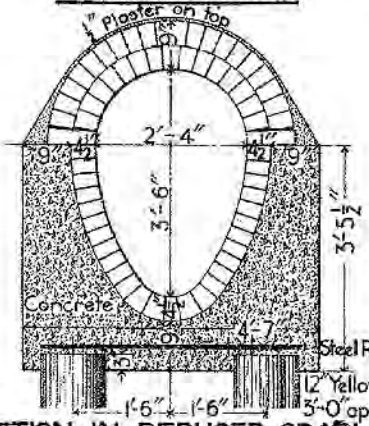

SECTION IN REDUCED CRADLE

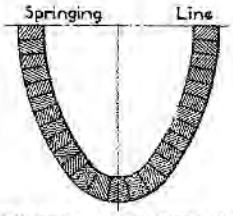

VITRIFIED SHALE BRICK INVERT

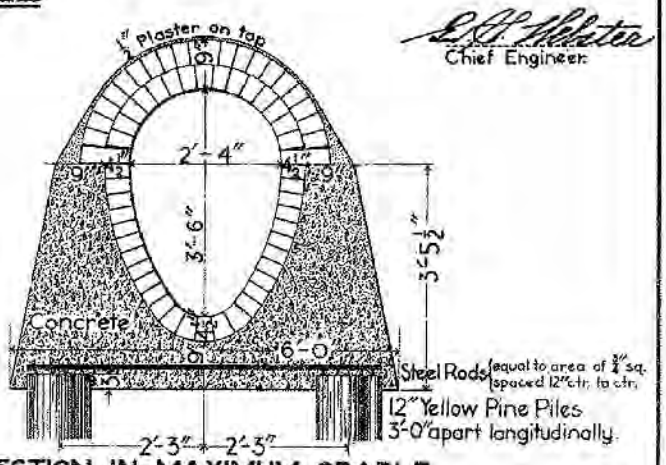

SECTION IN MAXIMUM CRADLE

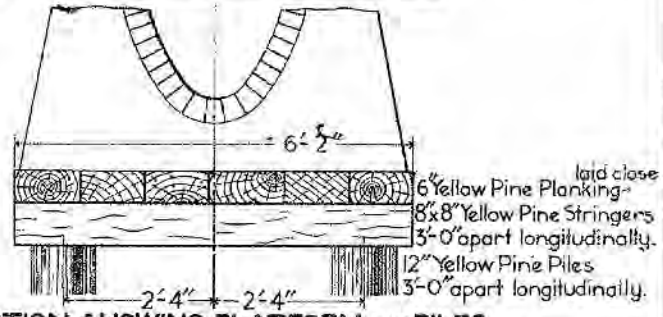

SECTION SHOWING PLATFORM AND PILES

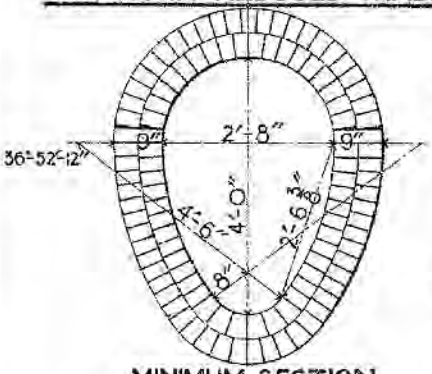

MINIMUM SECTION

Steel Rods (equal to area of ¾" square) and Piles, or Piles and Platform, if required, will be paid for at the price in the contract when ordered by the Chief Engineer.

Filling over top of Sewer to be at least 3 feet deep and with a slope not less than 1½ ft. horizontal over 1 ft. vertical, extending to the surface of the ground.

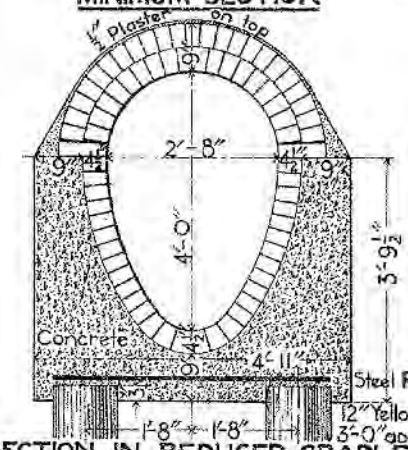

SECTION IN REDUCED CRADLE

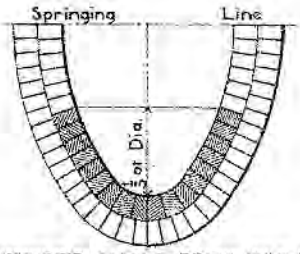

VITRIFIED SHALE BRICK INVERT

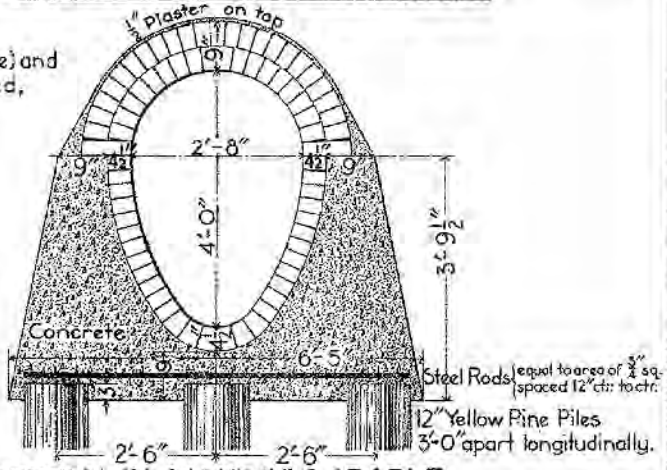

SECTION IN MAXIMUM CRADLE

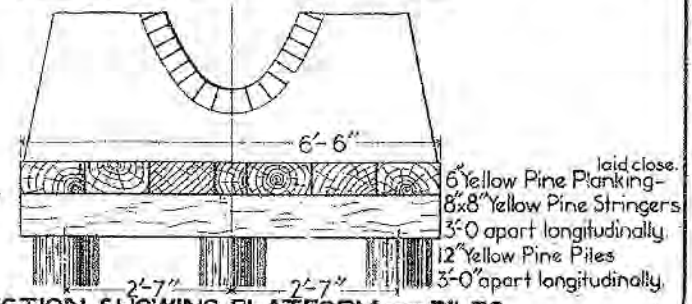

SECTION SHOWING PLATFORM AND PILES

GENERAL SECTIONS OF EGG-SHAPED SEWERS

DEPARTMENT OF PUBLIC WORKS
BUREAU OF SURVEYS
PHILADELPHIA
1906

Chief Engineer

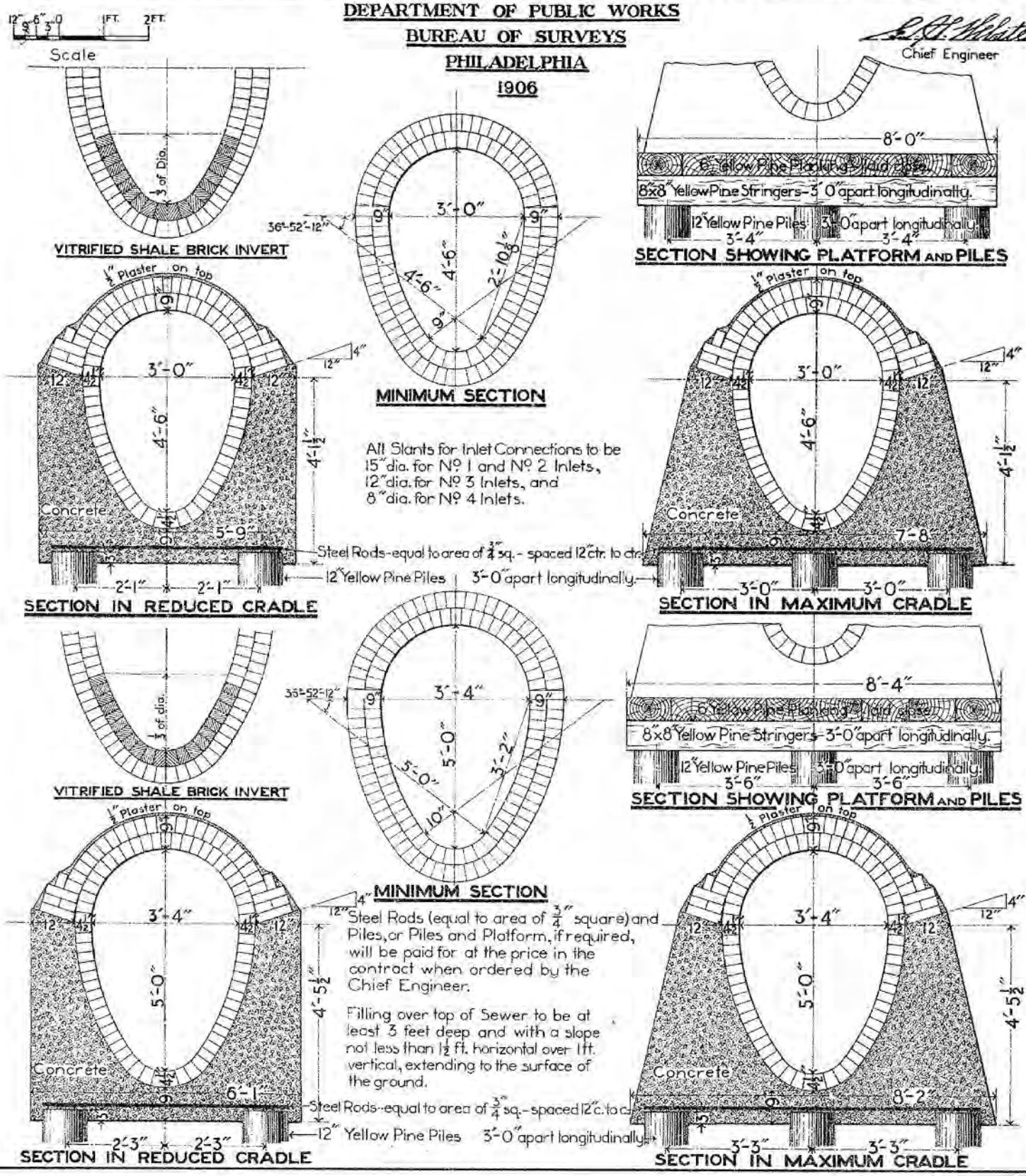

GENERAL SECTIONS FOR SEPARATE SYSTEM

12" 9" 6" 3" 0 1 FT. 2 FT.
Scale

DEPARTMENT OF PUBLIC WORKS
BUREAU OF SURVEYS
PHILADELPHIA
1906

Chief Engineer

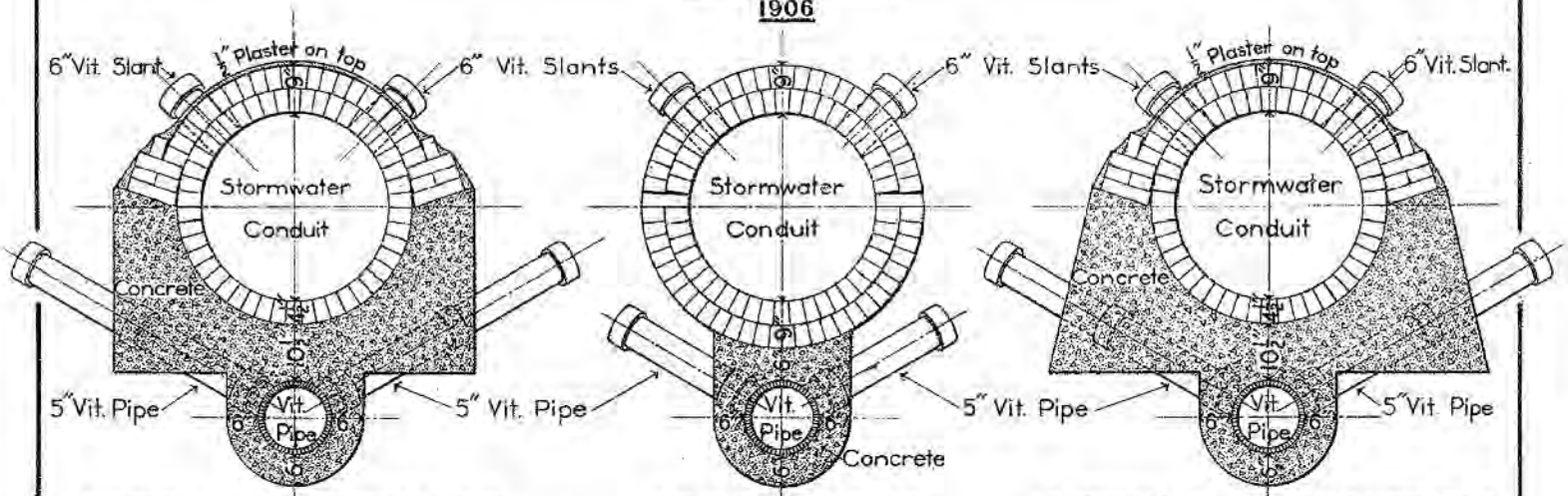

SECTION IN REDUCED CRADLE — MINIMUM SECTION — SECTION IN MAXIMUM CRADLE

RELATIVE POSITION FOR ALL CONDUITS OVER 2'-9" DIA.

6" dia. Vit. Slants for stormwater, and 5" dia. Vit. Slants and Pipes for house connections, as shown on sections, to be built every 15 feet, and included in price per linear foot of sewer.

All Slants for Inlet Connections to be 15" dia. for Nº 1 and Nº 2 Inlets, 12" dia. for Nº 3 Inlets, and 8" dia for Nº 4 Inlets, to connect to stormwater conduit only.

The Cross Sections of the Separate System must conform in all respects to the General Details of Brick and Pipe Sewers.

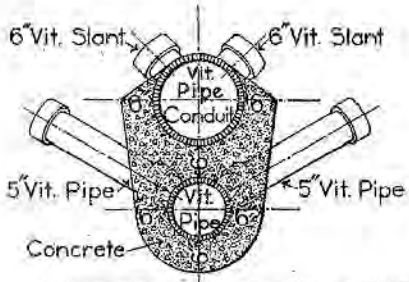

RELATIVE POSITION OF PIPE SEWERS

Concrete to be not less than 6" between outsides of Conduit and Pipe, but may be increased in special cases when required.

Concrete may be reduced in rock excavation only, as per specifications.

Filling over top of sewer to be at least 3 feet deep and with a slope not less than 1½ ft. horizontal over 1 ft. vertical, extending to the surface of the ground.

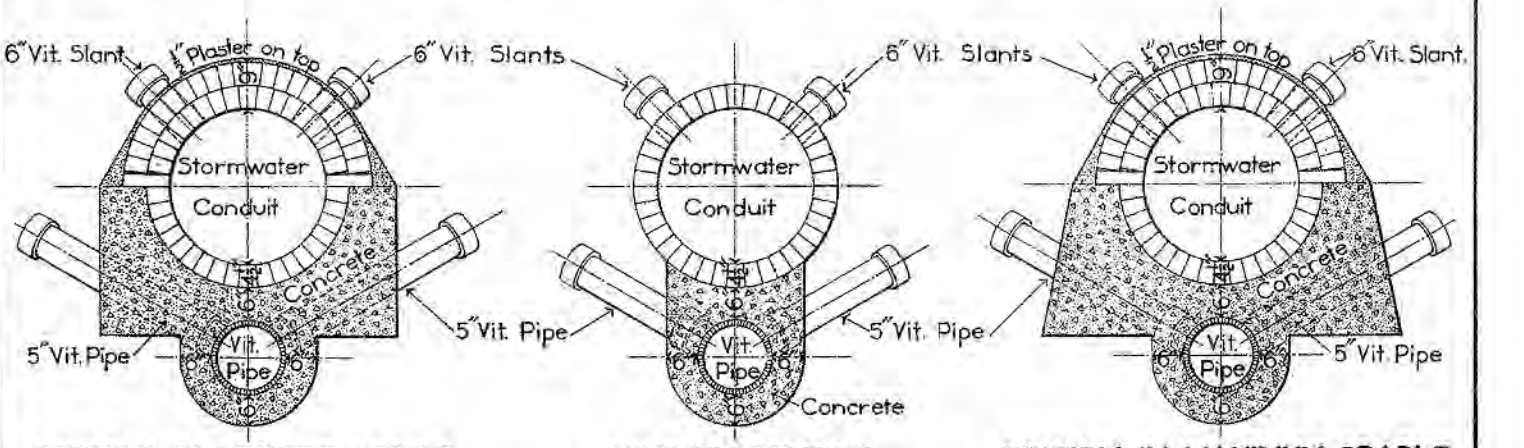

SECTION IN REDUCED CRADLE — MINIMUM SECTION — SECTION IN MAXIMUM CRADLE

RELATIVE POSITION FOR ALL CONDUITS UNDER 3'-0" DIA.

MANHOLE AND GENERAL DETAILS FOR VIT. PIPE SEWERS

DEPARTMENT OF PUBLIC WORKS
BUREAU OF SURVEYS
PHILADELPHIA
1906

Scale

Chief Engineer

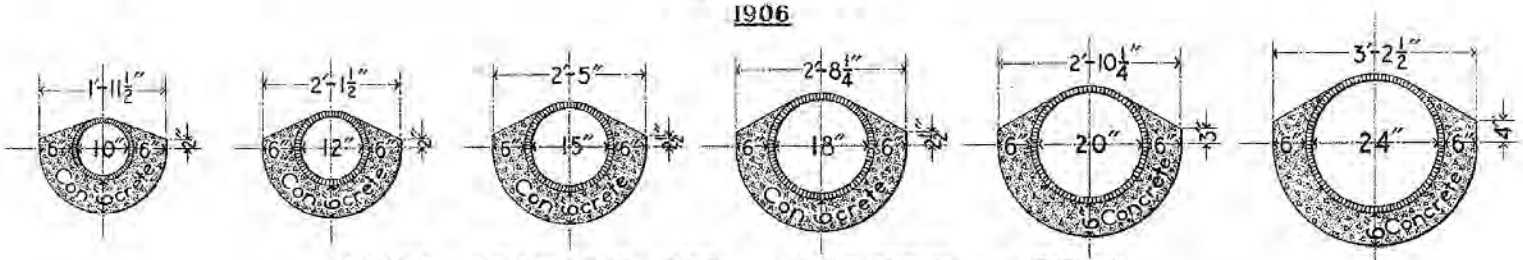

CROSS SECTIONS FOR VITRIFIED PIPES

All Slants for Inlet Connections to be 15" dia. for Nº 1 and Nº 2 Inlets, 12" dia. for Nº 3 Inlets, and 8" dia. for Nº 4 Inlets.

5" dia. Slants for House Connections to be not less than 15 ft. apart on each side by means of single Y's.

Filling over top of Sewer to be at least 3 ft. deep and with a slope not less than 1½ ft. horizontal over 1 ft. vertical, extending to the surface of the ground.

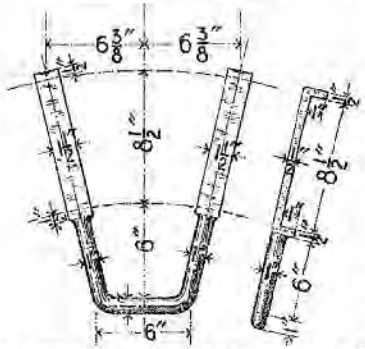

GALVANIZED WROUGHT-IRON STEPS FOR MANHOLES
To be not more than 18" apart.

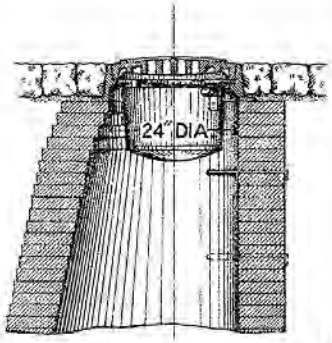

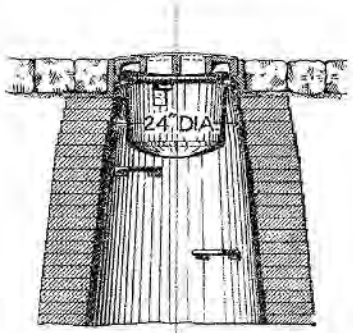

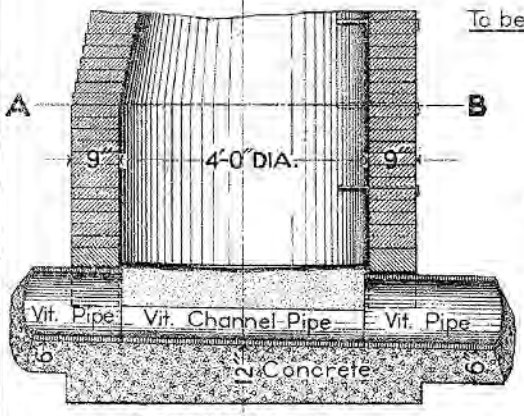

SECTION C–D

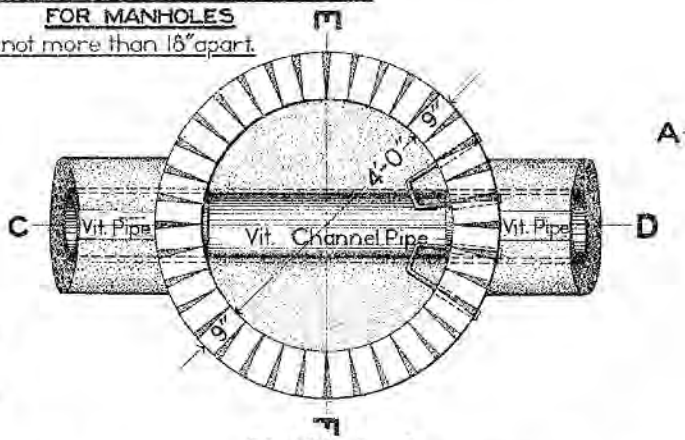

PLAN A–B

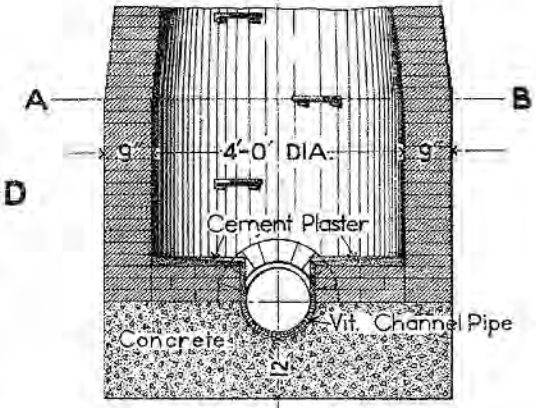

SECTION E–F

DETAILS OF MANHOLE FOR VITRIFIED PIPES

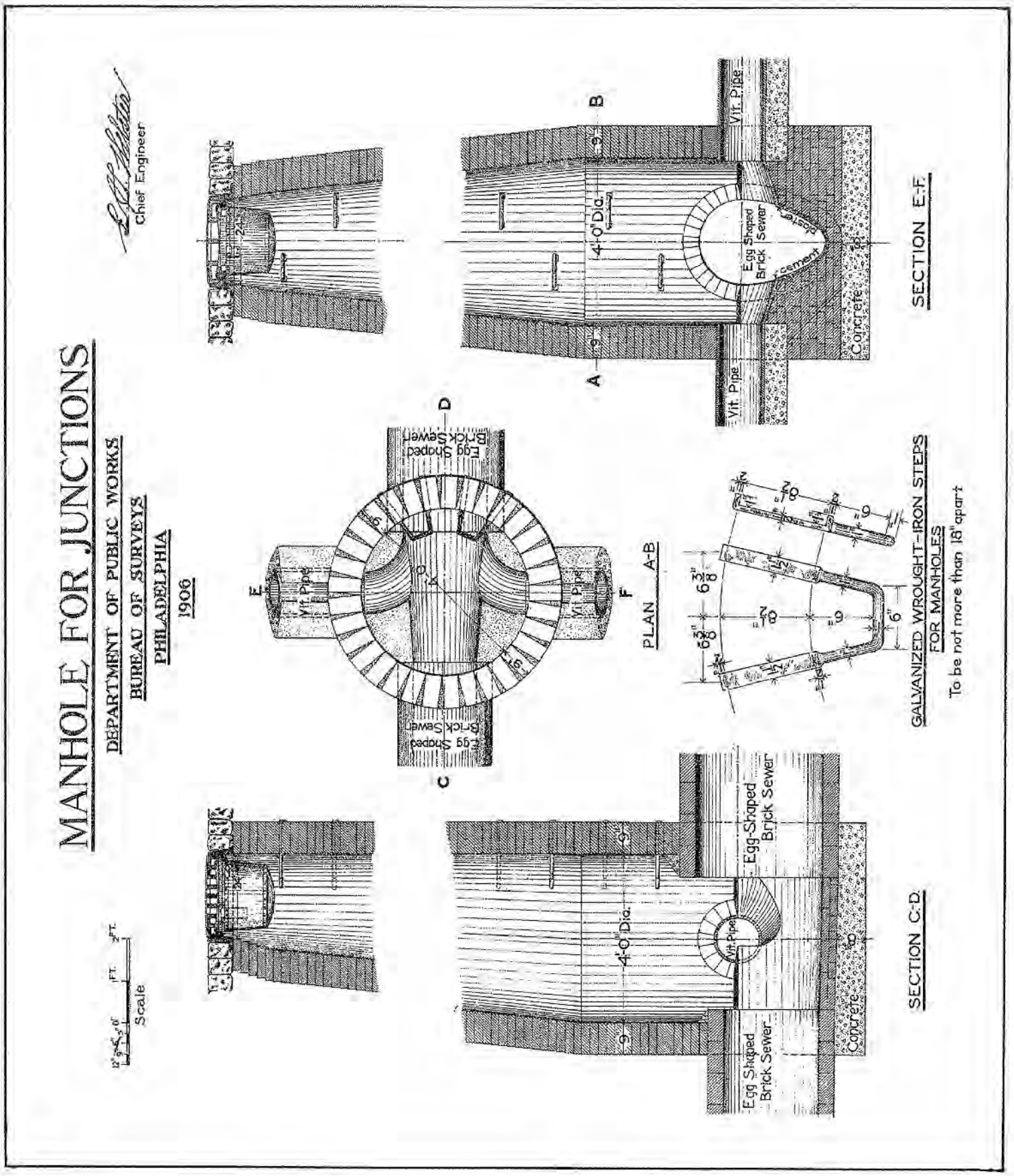
MANHOLE FOR JUNCTIONS
DEPARTMENT OF PUBLIC WORKS
BUREAU OF SURVEYS
PHILADELPHIA
1906
Chief Engineer
Scale
Egg Shaped Brick Sewer
Vit. Pipe
Concrete
Cement
4'-0" Dia.
PLAN A-B
SECTION E-F
SECTION C-D
GALVANIZED WROUGHT-IRON STEPS
FOR MANHOLES
To be not more than 18" apart

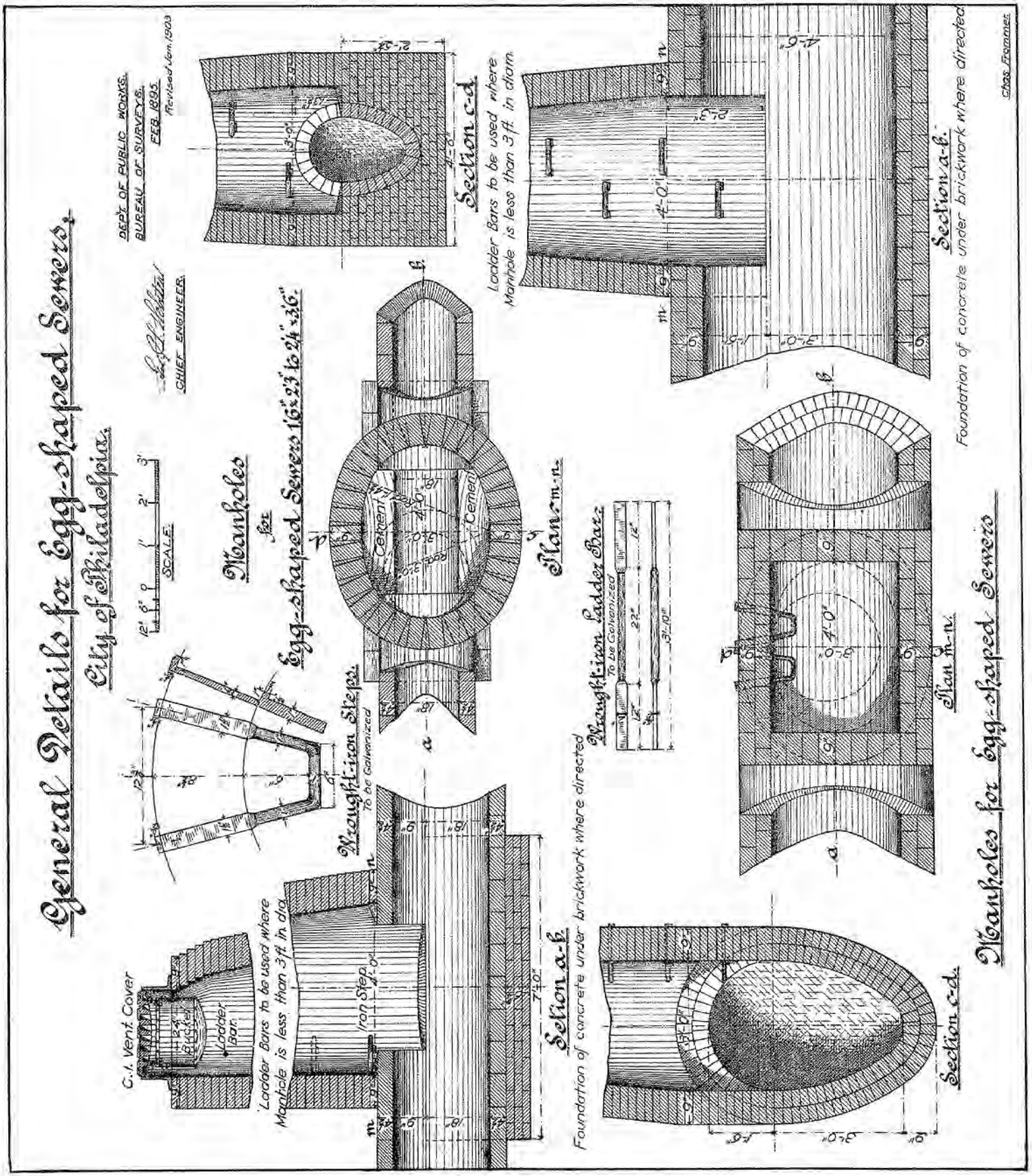
General Details for Egg-shaped Sewers.
City of Philadelphia.
DEP'T OF PUBLIC WORKS.
BUREAU OF SURVEYS.
FEB. 1895
Revised Jan. 1903
CHIEF ENGINEER.
SCALE.
Manholes
for
Egg-shaped Sewers 1'6"x2'3" to 2'4"x3'6".
Section c-d.
Ladder Bars to be used where Manhole is less than 3 ft in diam.
Section a-b.
Foundation of concrete under brickwork where directed
Wrought-iron Steps.
To be Galvanized
Wrought-iron Ladder Bar.
To be Galvanized
Plan m-n.
Cement
Concrete
C.I. Vent Cover
Ladder Bar.
Iron Step
Chas. Frommel.

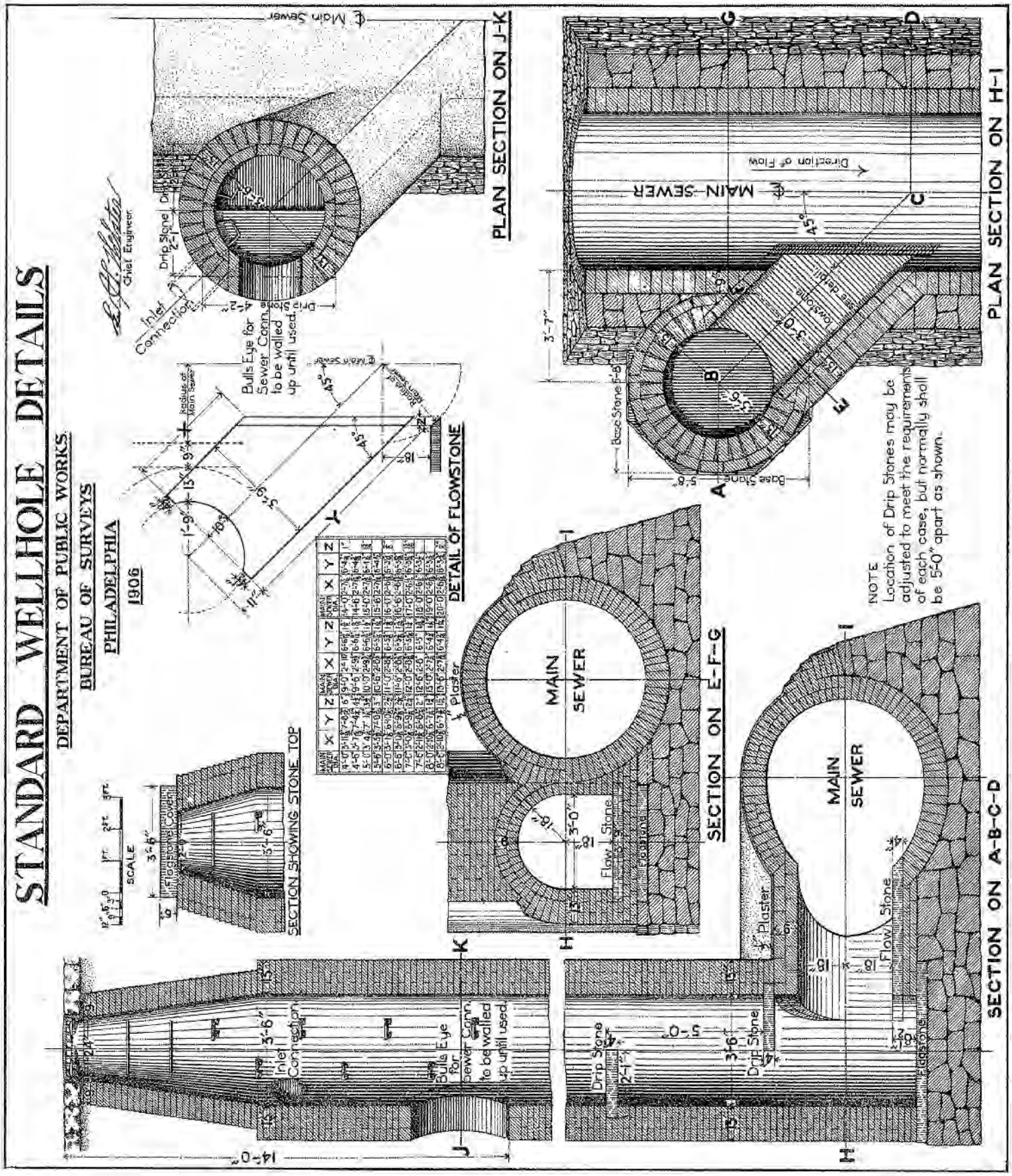
STANDARD WELLHOLE DETAILS
DEPARTMENT OF PUBLIC WORKS
BUREAU OF SURVEYS
PHILADELPHIA
1906
Chief Engineer
SCALE
SECTION SHOWING STONE TOP
DETAIL OF FLOWSTONE
PLAN SECTION ON J-K
PLAN SECTION ON H-I
SECTION ON E-F-G
SECTION ON A-B-C-D
MAIN SEWER
Direction of Flow
Base Stone
Drip Stone
Flow Stone
Flagstone
Plaster
Inlet Connection
Bulls Eye for Sewer Conn. to be walled up until used.
NOTE
Location of Drip Stones may be adjusted to meet the requirements of each case, but normally shall be 5'-0" apart as shown.

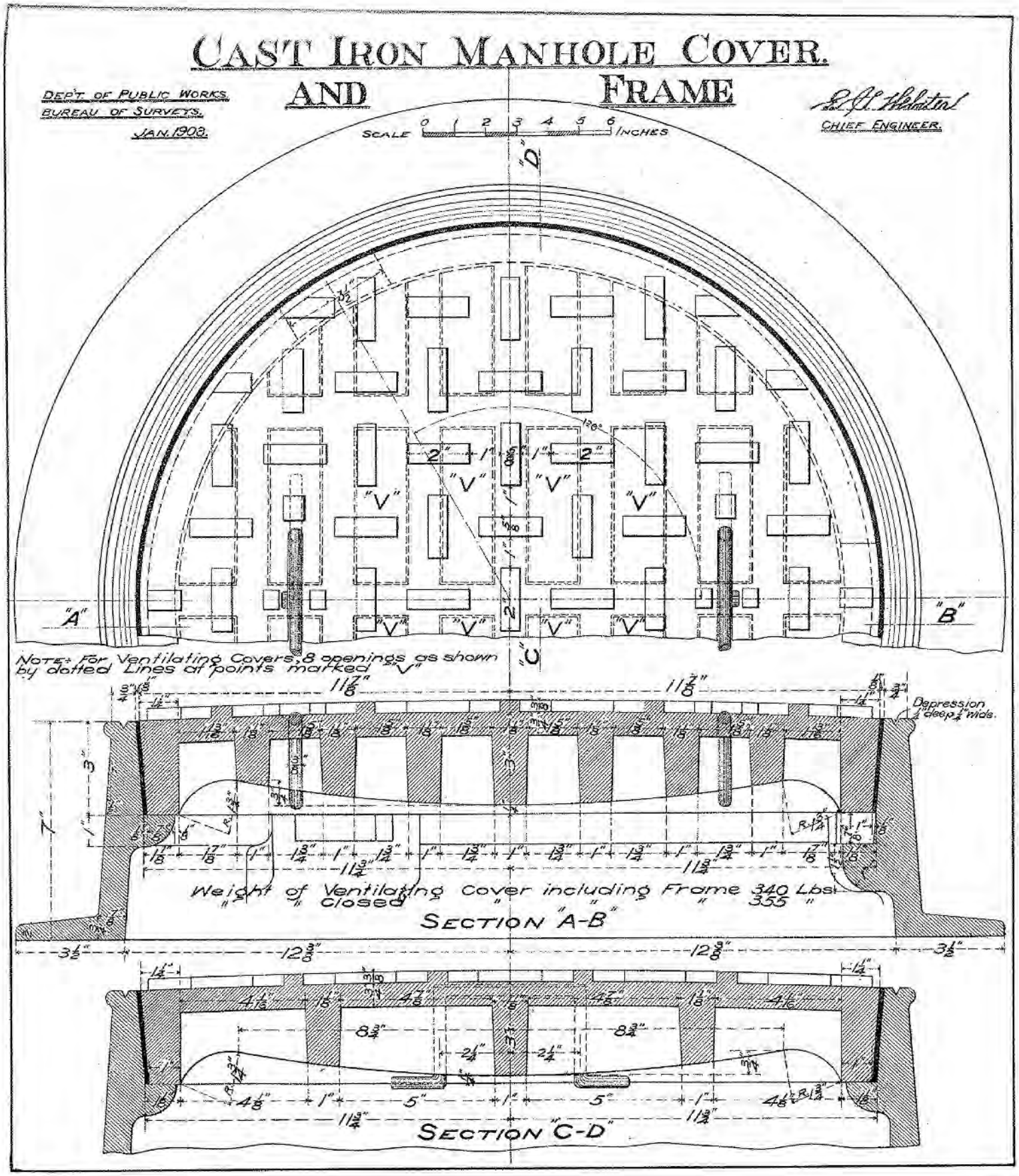

Back to Appendix Vf Table of Contents

ASPHALTUM FILLED
CAST IRON MANHOLE COVERS AND FRAMES

DEPARTMENT OF PUBLIC WORKS
BUREAU OF SURVEYS
JANUARY 1900

CHIEF ENGINEER

SECTION A-B-C

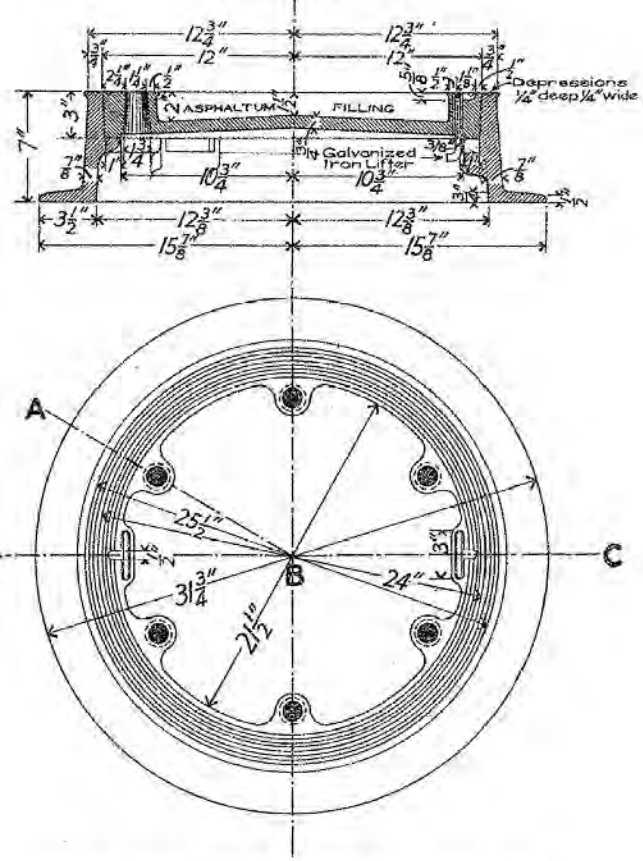

VENTILATING COVER AND FRAME

SECTION A-B-C

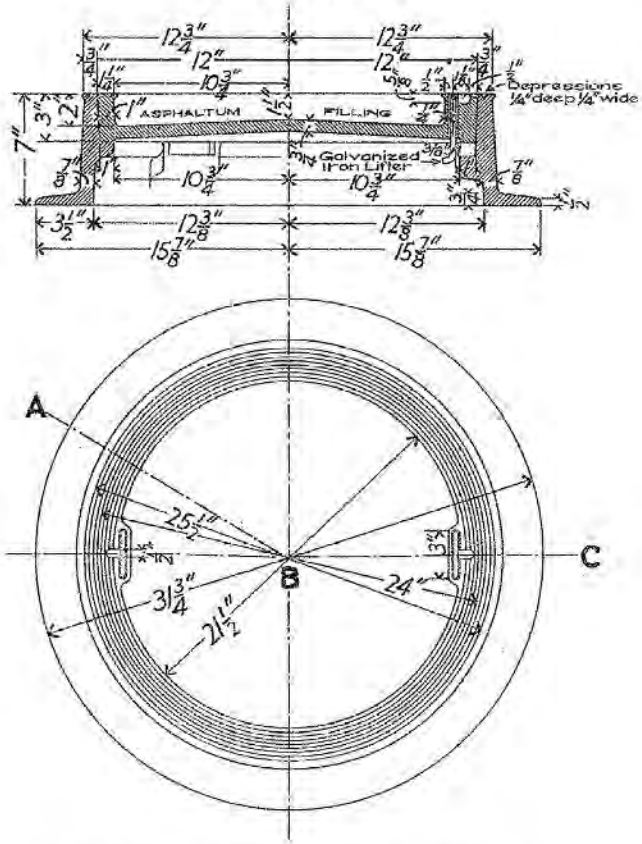

CLOSED COVER AND FRAME

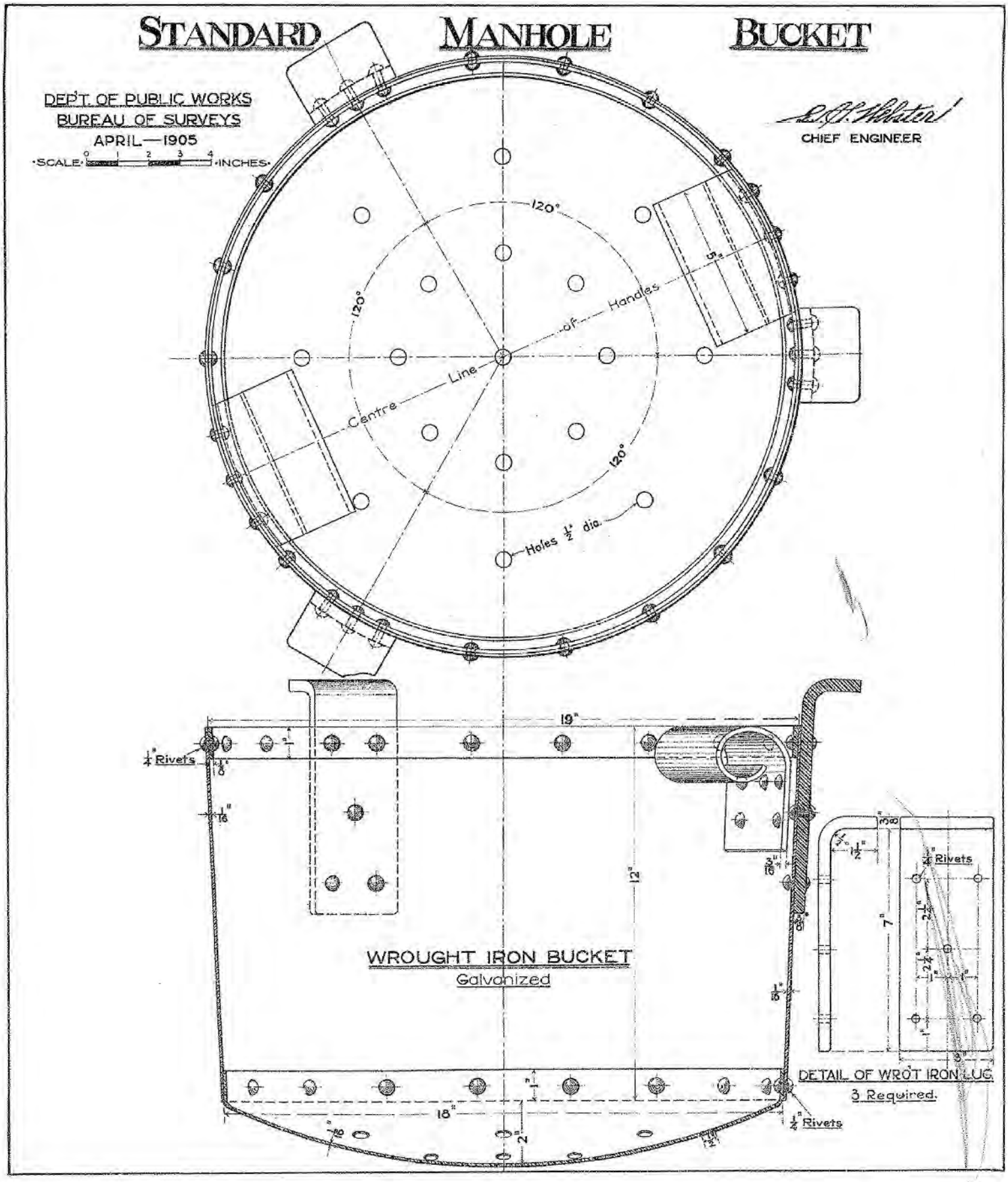
STANDARD MANHOLE BUCKET
DEPT. OF PUBLIC WORKS
BUREAU OF SURVEYS
APRIL—1905
SCALE 0 1 2 3 4 INCHES
CHIEF ENGINEER
120°
120°
120°
Centre Line of Handles
Holes 1/2" dia.
19"
1/4" Rivets
1/8"
1/16"
12"
3/16"
1/16"
WROUGHT IRON BUCKET
Galvanized
18"
1/4" Rivets
2"
DETAIL OF WROT IRON LUG
3 Required.
1/4" Rivets
7"
3/8"
1 1/2"
3"

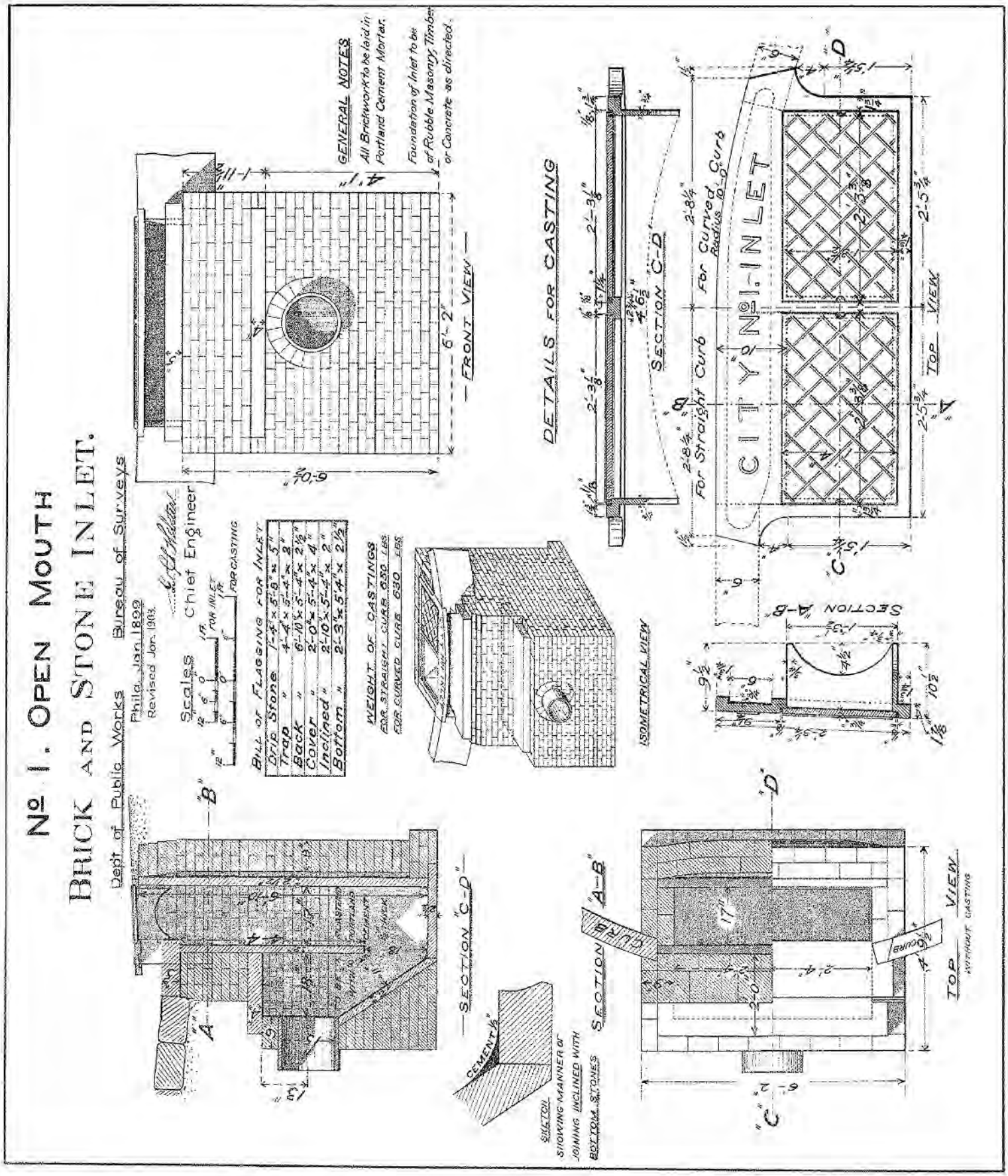
No 1. Open Mouth
Brick and Stone Inlet.
Dept of Public Works
Bureau of Surveys
Phila. Jan. 1899
Revised Jan. 1903.
Chief Engineer
Scales
FOR INLET
FOR CASTING
Bill of Flagging for Inlet
Drip Stone 1-4" x 5'-8" x 5"
Trap " 4'-4" x 5'-4" x 2"
Back " 6'-10" x 5'-4" x 2½"
Cover " 2'-0" x 5'-4" x 4"
Inclined " 2'-10" x 5'-4" x 2"
Bottom " 2'-3" x 5'-4" x 2½"
Weight of Castings
For straight curb 650 lbs
For curved curb 630 lbs
General Notes
All Brickwork to be laid in Portland Cement Mortar.
Foundation of Inlet to be of Rubble Masonry, Timber or Concrete as directed.
Front View
Details for Casting
Section C-D
Isometrical View
City No 1 - Inlet
For Curved Curb
Radius 10'-0"
For Straight Curb
Top View
Section A-B
Section "C-D"
Section "A-B"
Curb
Cement
Silicon
Showing manner of joining inclined with bottom stones
Top View without casting

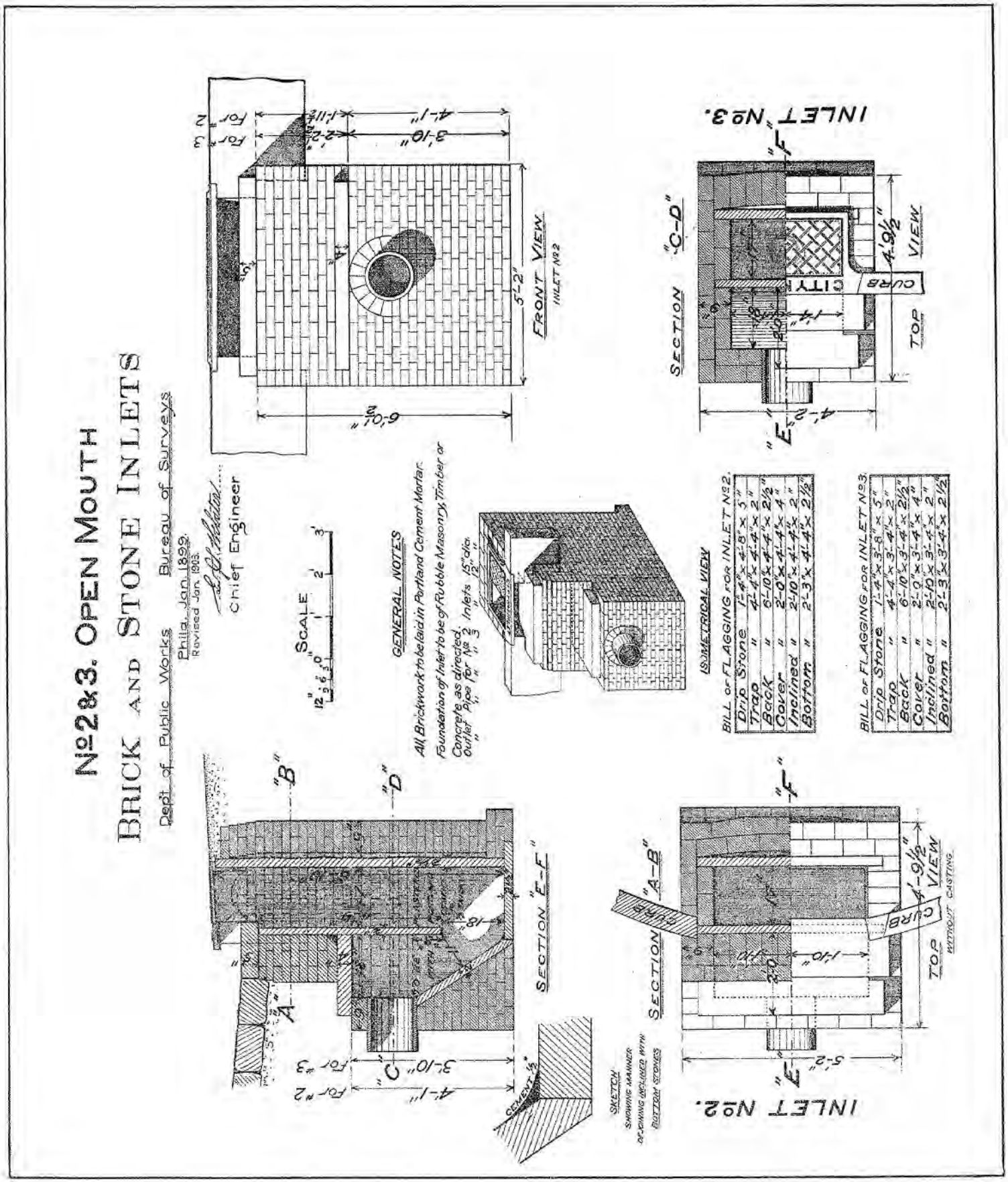
№2 & 3. OPEN MOUTH
BRICK AND STONE INLETS
Dept of Public Works
Bureau of Surveys
Phila., Jan. 1899.
Revised Jan. 1903.
Chief Engineer
SCALE
GENERAL NOTES
All Brickwork to be laid in Portland Cement Mortar.
Foundation of Inlet to be of Rubble Masonry, Timber or Concrete as directed.
Outlet Pipe for № 2 Inlets 15" dia.
" " " 3 " 12" "
ISOMETRICAL VIEW
BILL OF FLAGGING FOR INLET №2.
BILL OF FLAGGING FOR INLET №3.
FRONT VIEW
INLET №2
SECTION "C-D"
INLET №3.
TOP VIEW
CURB
CITY
SECTION "E-F"
SECTION "A-B"
INLET №2.
SKETCH SHOWING MANNER OF SETTING INCLINED WITH BOTTOM STONES
WITHOUT CASTING.
CEMENT

Back to Appendix Vf Table of Contents

No. 4 Open Mouth Brick and Stone Inlet.

—Dep't. of Public Works— —Bureau of Surveys.—

Phila. Jan. 1897.

Revised Jan. 1903.

Chief Engineer.

Scales { Inlet 12' 6' 0 1 Ft. / Casting 12' 6' 0 1 Ft.

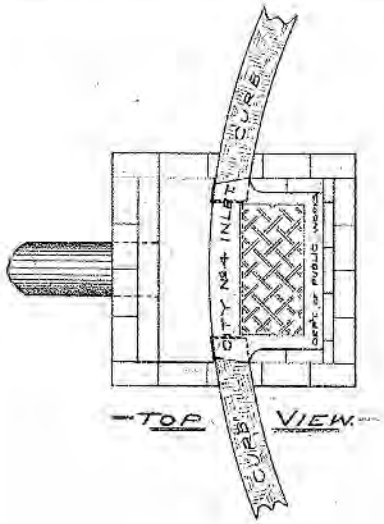

—Top View.—

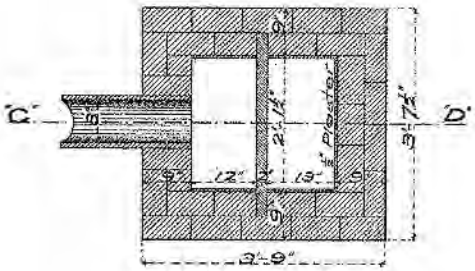

—Section "A-B."—

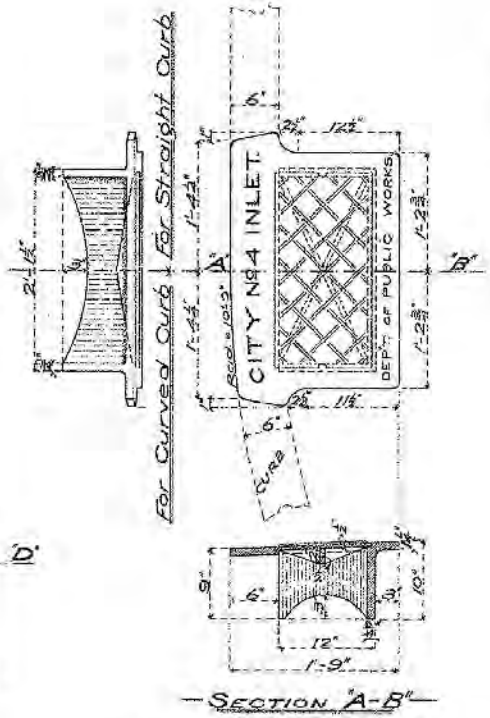

—Section "A-B."—

DETAILS FOR CASTING.

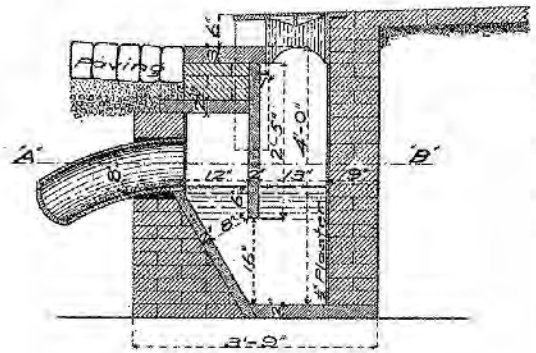

—Section "C-D."—

Bill of Flagging for Inlet.

Trap Stone	2" × 2'-5" × 2'-10"
Bottom "	2" × 2'-0" × 3'-7½"
Inclined "	2" × 2'-5" × 2'-10"
Drip "	3" × 1'-3" × 2'-10"
Cover "	2½" × 1'-4½" × 2'-10"

Weight of Castings.

Straight Curb	230 Lbs.
Curved "	225 "

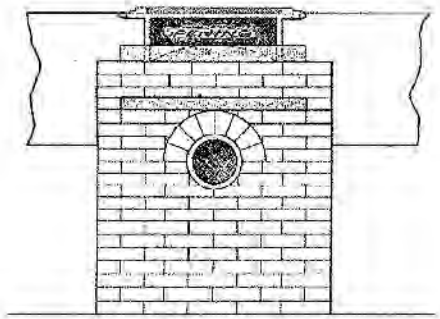

—Front View.—

GENERAL NOTES

All Brickwork to be Laid in Portland Cement Mortar.

All Brickwork inside of Inlet to be Plastered with Portland Cement Mortar.

Foundation of Inlet to be Rubble Masonry, Timber or Concrete when directed.

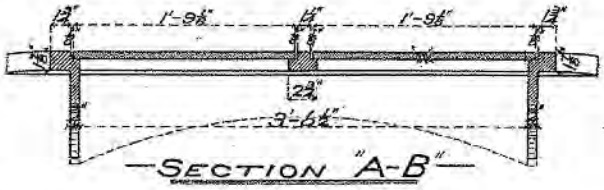

WEIGHTS OF CASTINGS

No 2	Curved	Curb	485 Lbs.
	Straight	"	495 "
No 3	Curved	"	340 "
	Straight	"	345 "

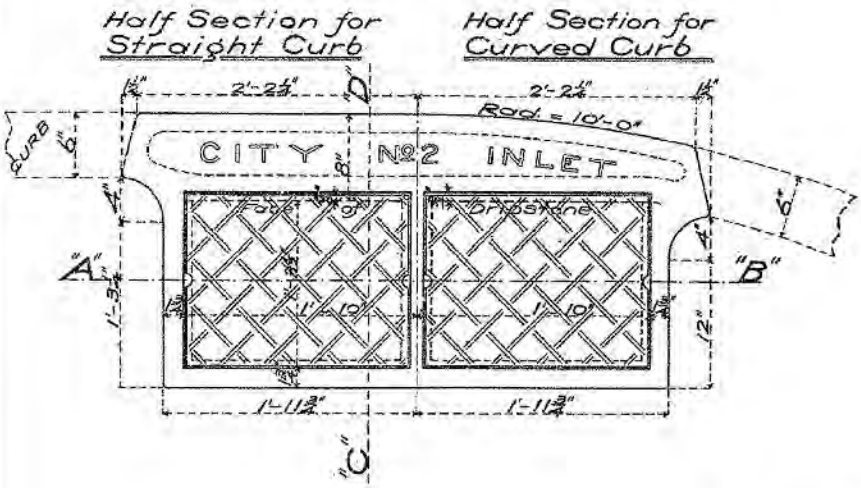

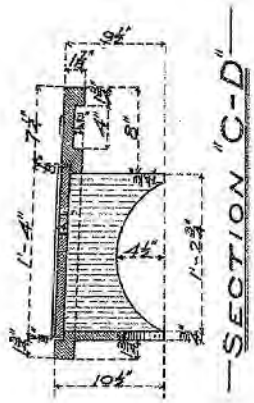

DETAILS OF CASTINGS FOR No 2 AND No 3 OPEN MOUTH INLETS

Dep't. of Public Works — Bureau of Surveys
Phila. Jan. 1897

Chief Engineer

SCALE 12" 6" 0 1 Ft.

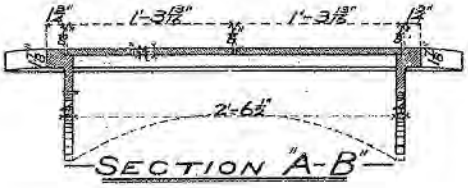

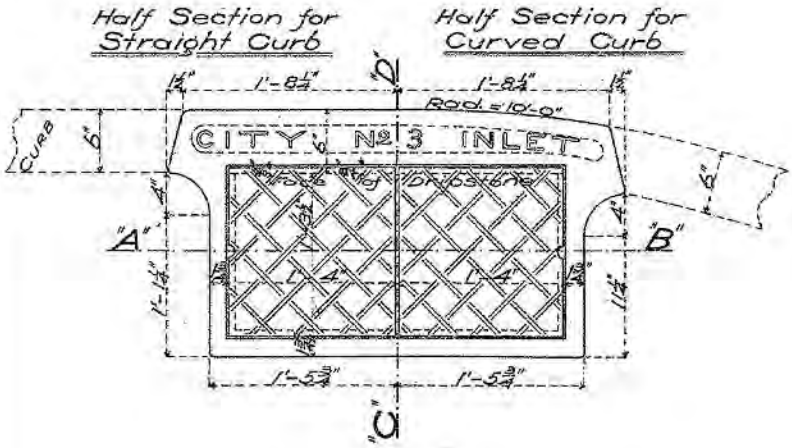

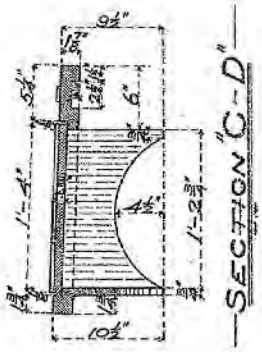

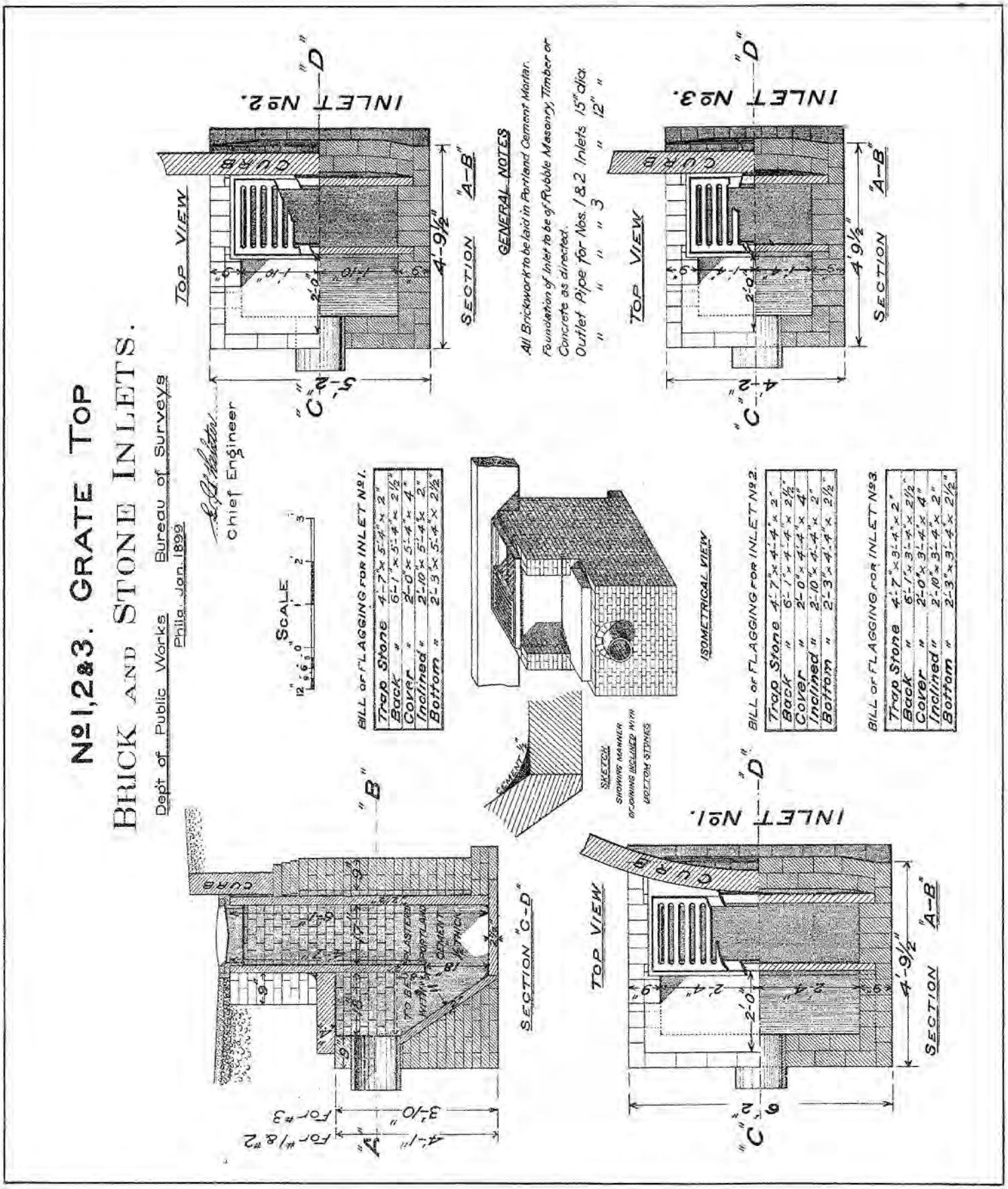
№1,2&3. GRATE TOP
BRICK AND STONE INLETS.
Dept of Public Works
Bureau of Surveys
Phila. Jan. 1899
Chief Engineer
SCALE
INLET №2.
INLET №3.
INLET №1.
TOP VIEW
SECTION
SECTION "C-D"
ISOMETRICAL VIEW
SKETCH SHOWING MANNER OF JOINING INCLINED WITH BOTTOM STONES
GENERAL NOTES
All Brickwork to be laid in Portland Cement Mortar.
Foundation of Inlet to be of Rubble Masonry, Timber or Concrete as directed.
Outlet Pipe for Nos. 1 & 2 Inlets 15" dia.
" " " 3 " 12" "
BILL OF FLAGGING FOR INLET №1.
Trap Stone 4'-7" x 5'-4" x 2"
Back " 6'-1" x 5'-4" x 2½"
Cover " 2'-0" x 5'-4" x 4"
Inclined " 2'-10" x 5'-4" x 2"
Bottom " 2'-3" x 5'-4" x 2½"
BILL OF FLAGGING FOR INLET №2.
Trap Stone 4'-7" x 4'-4" x 2"
Back " 6'-1" x 4'-4" x 2½"
Cover " 2'-0" x 4'-4" x 4"
Inclined " 2'-10" x 4'-4" x 2"
Bottom " 2'-3" x 4'-4" x 2½"
BILL OF FLAGGING FOR INLET №3.
Trap Stone 4'-7" x 3'-4" x 2"
Back " 6'-1" x 3'-4" x 2½"
Cover " 2'-0" x 3'-4" x 4"
Inclined " 2'-10" x 3'-4" x 2"
Bottom " 2'-3" x 3'-4" x 2½"
For #1 & #2
For #3

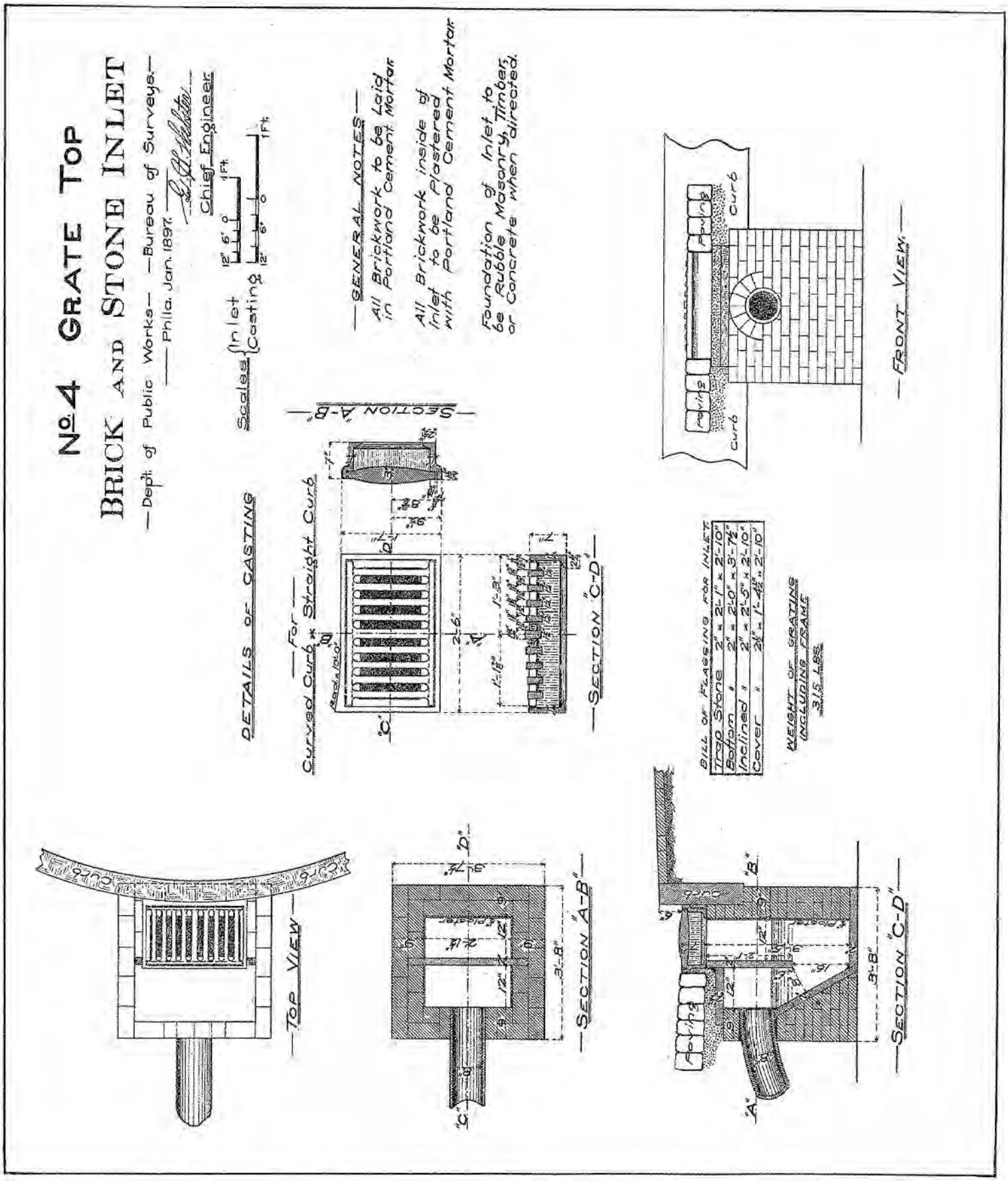
No. 4 GRATE TOP
BRICK AND STONE INLET
Dep't. of Public Works— —Bureau of Surveys.—
Phila. Jan. 1897.
Chief Engineer
Scales {Inlet / Casting
GENERAL NOTES
All Brickwork to be Laid in Portland Cement Mortar
All Brickwork inside of Inlet to be Plastered with Portland Cement Mortar
Foundation of Inlet to be Rubble Masonry, Timber, or Concrete when directed.
DETAILS OF CASTING
For Curved Curb * Straight Curb
SECTION A-B
SECTION "C-D"
FRONT VIEW
TOP VIEW
SECTION "A-B"
SECTION "C-D"
BILL OF FLAGGING FOR INLET
Trap Stone 2" x 2'-1" x 2'-10"
Bottom " 2" x 2'-0" x 3'-7½"
Inclined " 2" x 2'-5" x 2'-10"
Cover " 2½" x 1'-4½" x 2'-10"
WEIGHT OF GRATING INCLUDING FRAME
315 LBS.
Curb
Paving

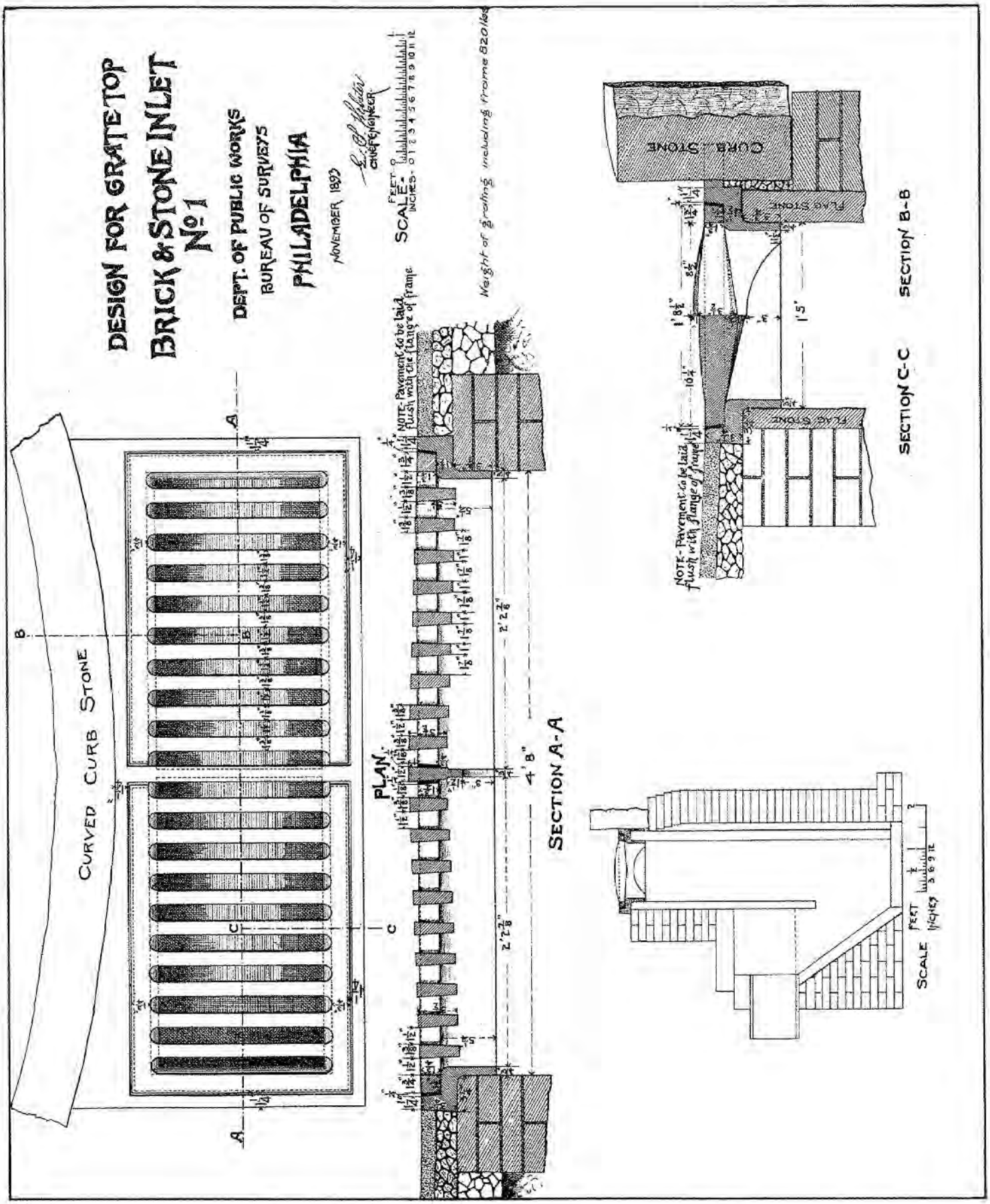

Back to Appendix Vf Table of Contents

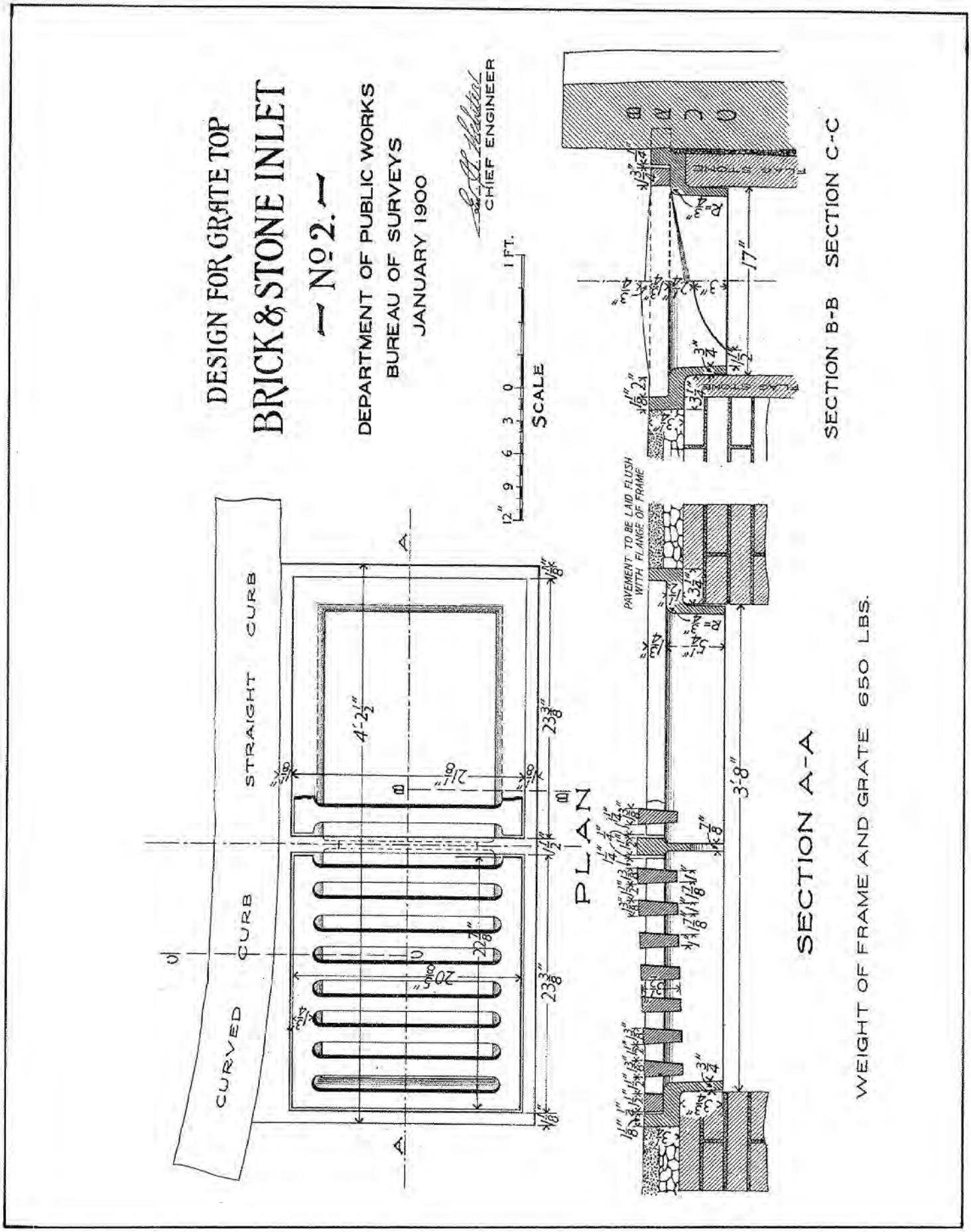
DESIGN FOR GRATE TOP
BRICK & STONE INLET
— No 2. —
DEPARTMENT OF PUBLIC WORKS
BUREAU OF SURVEYS
JANUARY 1900
CHIEF ENGINEER
SCALE
1 FT.
12" 9 6 3 0
CURB
SECTION B-B
SECTION C-C
PAVEMENT TO BE LAID FLUSH WITH FLANGE OF FRAME
STRAIGHT CURB
CURVED CURB
PLAN
SECTION A-A
WEIGHT OF FRAME AND GRATE 650 LBS.

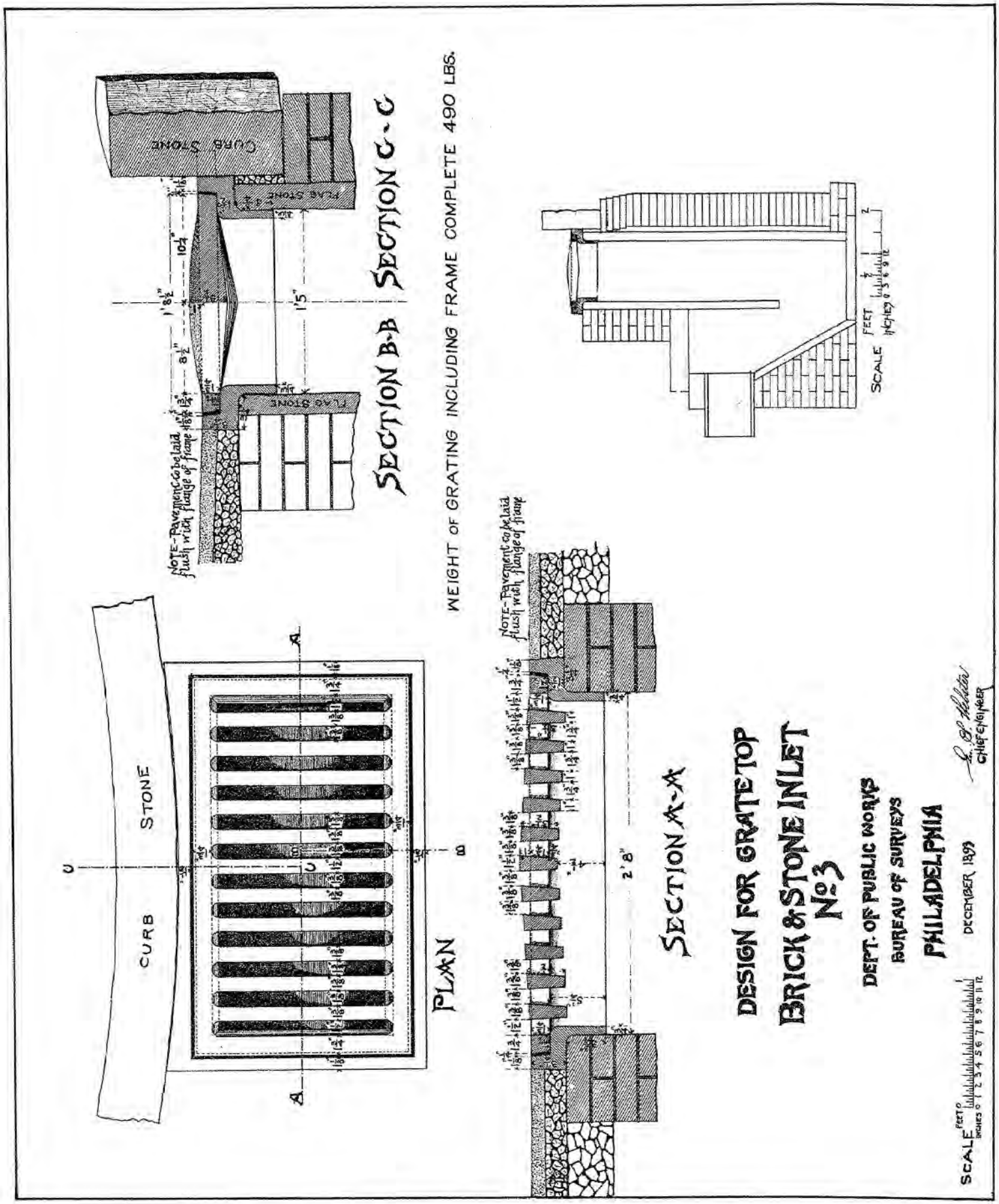

Back to Appendix Vf Table of Contents

COUNTRY ROAD INLET No. 3B.

Dept. of Public Works Bureau of Surveys
Phila. July 1904.

Chief Engineer

SCALE

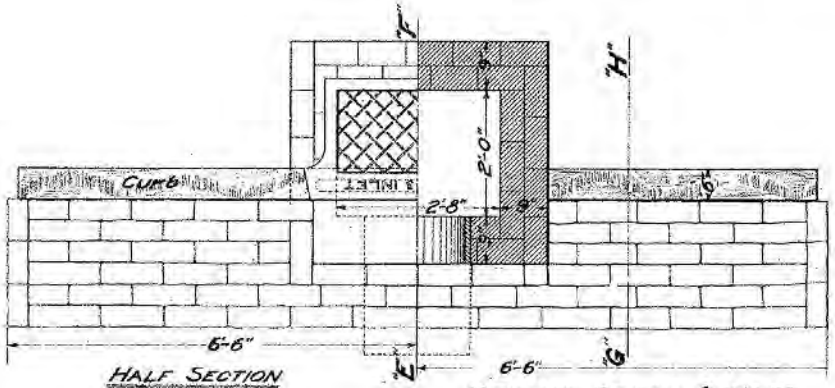

HALF SECTION OF TOP VIEW

VIEW AND SECTION A-B-C-D

GENERAL NOTES

All Brickwork to be Laid in Portland Cement Mortar.

Foundation of Inlet to be Rubble Masonry, or Concrete when directed.

The Casting shall be that of a Standard No. 3 Open Mouth Inlet.

The price for Inlet shall include a Belgian Block Gutter on Concrete Base, for a distance at least 6'-6" on each side, from the centre line of the Inlet, as shown.

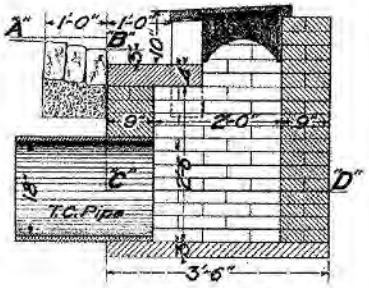

SECTION E-F

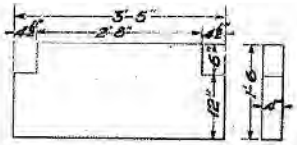

VIEWS SHOWING CUTTING OF DRIP-STONE.

BILL OF FLAGGING FOR INLET.

Drip Stone	4 x 1'-6" x 3'-5"
Bottom "	3 x 3'-6" x 4'-2"

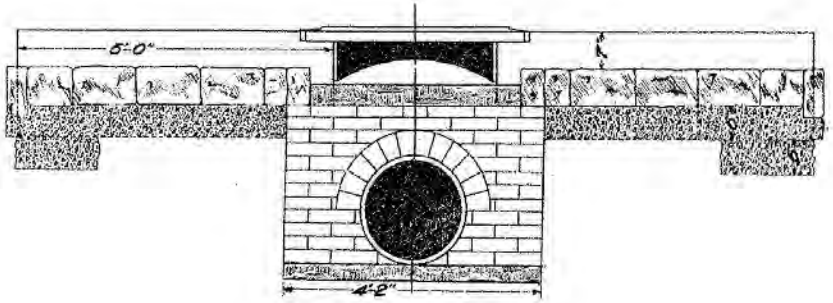

FRONT VIEW

VIEWS SHOWING CUTTING OF CURB STONE.

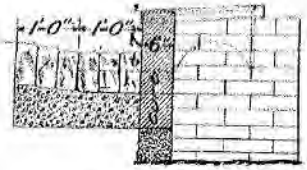

SECTION G-H

SURVEY DISTRICTS

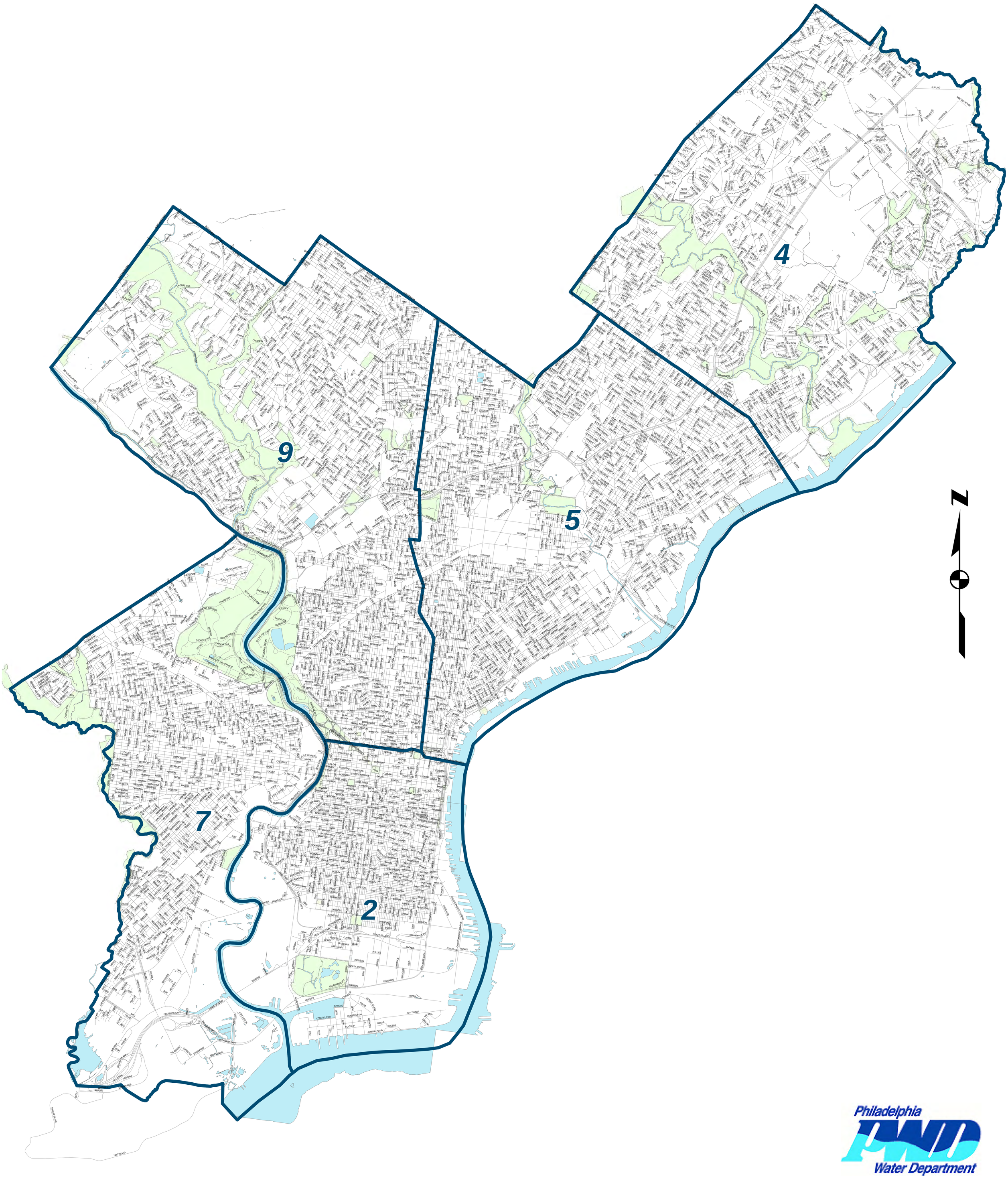

Philadelphia Water Department

APPENDIX Vg Back to Appendix V

HIGHWAY DISTRICTS

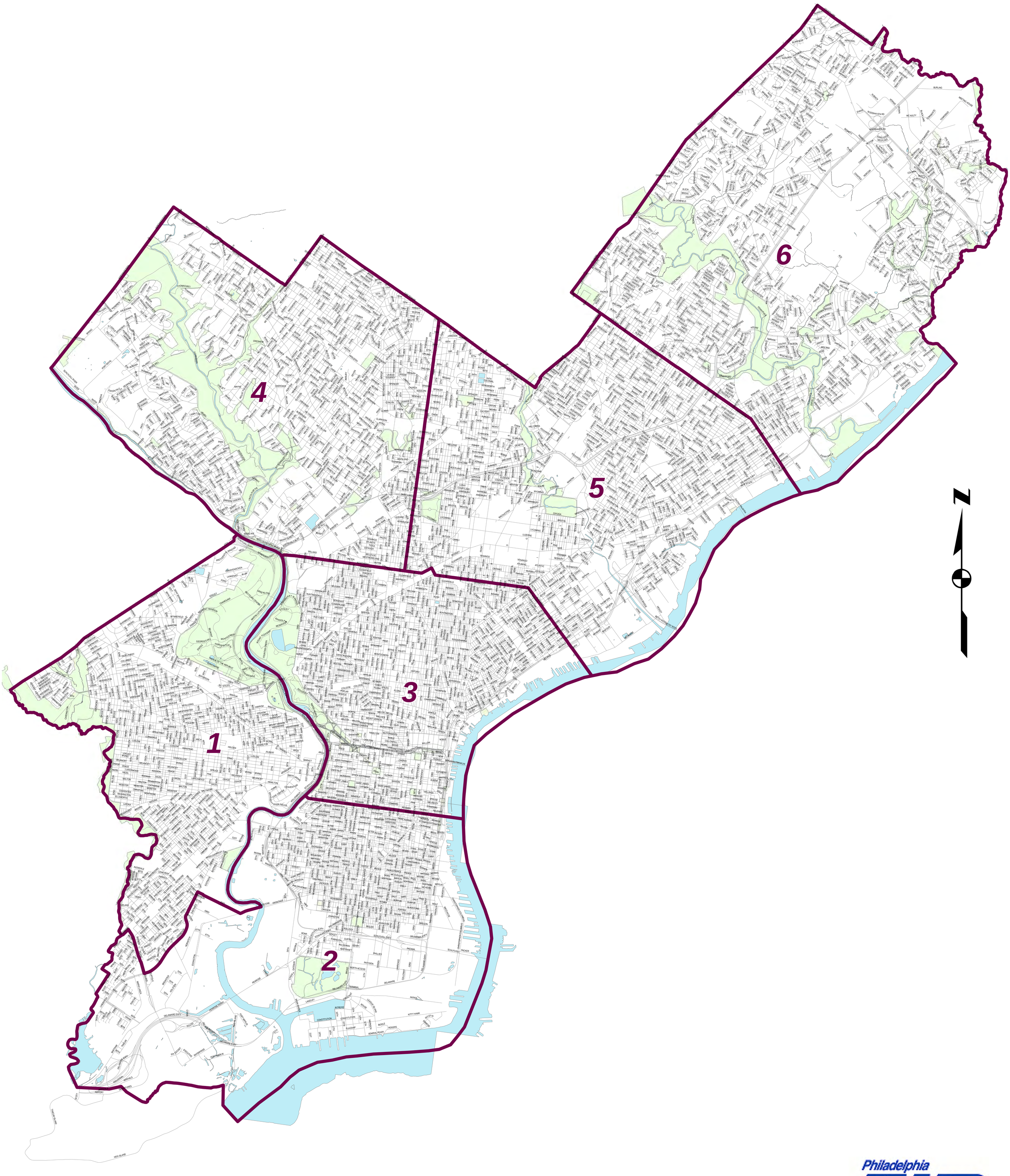

Philadelphia Water Department

APPENDIX Vh Back to Appendix V

APPENDIX Vi

STATE HIGHWAY ROUTE NUMBERS

<u>LEGEND</u>:
SR – STATE ROUTE
LR – LEGISLATIVE ROUTE
(OLD DESIGNATION FOR STATE HIGHWAYS)

SEPTEMBER 25, 2000

STREET	SR#	LR#	FROM	TO	MILES
Academy Rd	1013	1032	I-95/Delaware Expy	Willits Rd	0.66
	1013	67294	Willits Rd	Knights Rd	4.13
Adams Ave	1002	67049	Crescentville Rd	Roosevelt Blvd	0.98
	1007	67350	Torresdale Ave	Tacony St	0.07
Allegheny Ave	2014	67288	Ridge Ave	Delaware Ave	5.4
Allens Ln	4003	67329	Wissahickon Ave	Germantown Ave	1.3
Aramingo Ave	2009	67047	Delaware Ave	Harbison Ave	4.01
Arch St.	3007	67317	Columbus Blvd	16th St	1.35
	3031	67005 A	Schuylkill Ave W	30th St	0.11
B St	1003	67339	Allegheny Ave	Erie Ave	0.6
Baltimore Ave	13	67283	39th St	City Limits	2.55
Bartram Ave	3019		I-95/Delaware Expy	Island Ave	1.41
	3002		Island Ave	84th St	0.59
Belmont Ave	3005	67365	Lancaster Ave	City Ave	2.34
Berkley St	4009	67306	Wayne Ave	Germantown Ave	0.17
Bethlehem Pike	4007	67028	Germantown Ave	Stenton Ave	0.66
Bridge St	1009	67298	Frankford Ave	Tacony St	0.75
	1009	67340	Tacony St	Richmond St	0.53
Broad St	3001	67373	I-95/Delaware Expy	Oregon Ave	1.2
	291	67312	Oregon Ave	S Penn Sq	2.33
	611	67312	Filbert St	67th Ave	6.88
Bustleton Ave	1009	67332	Frankford Ave	Harbison Ave	1.28
	1009		Harbison Ave	Welsh Rd	3.81
	532	67332	Welsh Rd	Woodhaven Rd	2.03
	532		Woodhaven Rd	County Line Rd	0.9
Castor Ave	1005	67288	Delaware Ave	Richmond St	0.53
	1005	67347	Richmond St	Bustleton Ave	6.08
Cecil B Moore Ave	2010		10th St	Ridge Ave	1.11
Cheltenham Ave	1002	67059	Crescentville Rd	Old York Rd	1.58
	309	46116	Old York Rd	Ogontz Ave	1.09
	2035	46116	Ogontz Ave	Ivy Hill Rd	1.46
Chester Ave	3023	67282	65th St (W)	65th St (E)	0.04
	3023	67282	52nd St	45th St	0.62
	3023		45th St	42nd St	0.21
Chestnut St	3008	67318	Columbus Blvd	Broad St	1.12
	3	67318	Broad St	Schuylkill Ave W	1.01
	3	67351	Schuylkill Ave W	Cobbs Creek Pkwy	3.38
Chew Ave	4004	67346	Olney Ave	Mt Airy Ave	2.16
City Ave	4006		Ridge Ave	I-76/Schuylkill Expy	0.34
	1		I-76/Schuylkill Expy	City Limits	4.45
Civic Center Bl	3005	67060	University Ave	Convention Ave	0.35
Clarissa St	4007	67306	Hunting Park Ave	Roberts Ave	0.51
Cliveden St	4013	67029	Park Line Dr	Lincoln Dr	0.45
Cobbs Creek Pkwy	3015	67368	Woodland Ave	Hoffman Ave	1.95
	3015	67284	Baltimore Ave	Walnut St	1.36
	3	67367	Walnut St	Market St	0.2
Columbus Blvd	2001	67025	Oregon Ave	Spring Garden St	3.01
Cottman Ave	1012	67293	I-95/Delaware Expy	State Rd	0.11
	73	67293	State Rd	City Limits	4.41
County Line Rd	2038	9033	Bustleton Ave	City Limits	0.38

STREET	SR#	LR#	FROM	TO	MILES
Crescentville Rd	1002	67059	Adams Ave	Cheltenham Ave	0.29
Dauphin St	2012	67332	Aramingo Ave	Front St	0.84
	2012		Front St	Broad St	1.25
	2012		Broad St	Ridge Ave	1.59
Delaware Ave	2001	67025	Spring Garden St	Aramingo Ave	1.09
	1005	67288	Allegheny Ave	Castor Ave	0.49
Eakins Oval	3007	67030	South/East side		0.08
	3007	67002	North/West side		0.08
Easton Rd	4021	67354	Mt Airy Ave	Wadsworth Ave	0.46
Elmwood Ave	3021	67308	Lindbergh Blvd	58th St	0.2
	3021		58th St	63rd St	0.5
	3021		63rd St	Island Ave	1.09
Erie Ave	1004	67331	Kensington Ave	Hunting Park Ave	3.56
Essington Ave	3019	67311	Passyunk Ave	Bartram Ave	1.52
Filbert St	2004		Juniper St	Broad St	0.06
Frankford Ave	2007		Delaware Ave	Kensington Ave	3.74
	2007		Kensington Ave	Robbins St	2.11
	13		Robbins St	City Limits	4.62
B Franklin Pkwy	3007	67002	16th St	Logan Circle (east)	0.21
	3007	67002	Logan Circle (west)	Eakins Oval	0.65
Germantown Ave	4005	67353	Broad St	Washington La	2.79
	4007	67303	Washington La	Bethlehem Pike	2.37
Girard Ave	2008	67302	Richmond St	S College Ave	2.65
	2008	67030	W College Ave	29th St	0.3
	2006	67301	29th St	34th St	0.61
	30	67301	34th St	Lancaster Ave	1.22
Godfrey Ave	4002		Crescentville Rd	Broad St	1.55
Grant Ave	1018	67357	State Rd	Welsh Rd	3.15
Grays Ave	3021	67309	49th St	Lindbergh Blvd	0.29
Grays Ferry Ave	3021	67309	34th St	Woodland Ave	0.83
Harbison Ave	2009	67047	Aramingo Ave	Roosevelt Blvd	1.79
Haverford Ave	3018		Lancaster Ave	City Ave	3.91
Henry Ave	4001	67343	Allegheny Ave	Cathedral Rd	5.14
Hoffman Ave	3015	67368	58th St	Cobbs Creek Pkwy	0.12
Holme Ave	1016	67296	Roosevelt Blvd	Academy Rd	1.88
Huntingdon Pk	232	67325	Pine Rd	Fillmore St	0.14
Hunting Park Ave	3033	67286	Kelly Dr	Ridge Ave	0.11
	13	67286	Ridge Ave	Broad St	2.34
I-76/Schuylkill Expy	76	67278	Passyunk Ave	City Ave	9.34
I-95/Delaware Expy	95	795	City Limits	City Limits	21.92
I-676/Vine St Expy	676	67045	I-95/Delaware Expy	I-76/Schuylkill Expy	2.02
Independence Mall E	2003		Walnut St	Race St	0.34
Independence Mall W	2005		Walnut St	Race St	0.34
Industrial Hwy	291	67054	Island Ave	City Limits	1.53
Island Ave	3013	67281	Woodland Ave	Industrial Hwy	1.93
Juniper St	2004	67360	Market St	Filbert St	0.07
Kelly Dr	3007		Eakins Oval	Lincoln Dr	4.48
J F Kennedy Blvd	2004		Broad St	15th St	0.08
	3037		15th St	Schuylkill Ave W	0.84
	3028		30th St	Market St	0.24

STREET	SR#	LR#	FROM	TO	MILES
Keystone St	1024	67327	Robbins St	Levick St	0.12
Kingsessing Ave	3023	67282	52nd St	61st St	0.92
	3023		61st St	Cemetery Ave	0.21
	3023		Cemetery Ave	65th St	0.09
Knights Rd	1015	67338	Frankford Ave	City Limits	2.49
Lancaster Ave	3005	67314	33rd St	34th St	0.12
	3005		34th St	Belmont Ave	1.11
	3012	67010	Belmont Ave	Girard Ave	0.55
	30	67010	Girard Ave	City Ave	2.11
Lehigh Ave	2014	67356	Richmond St	Kensington Ave	1.04
	2014		Kensington Ave	Ridge Ave	3.25
Levick St	1008	67022	State Rd	Frankford Ave	0.88
	13	67020	Frankford Ave	Roosevelt Blvd	0.75
	1008	67358	Roosevelt Blvd	Rising Sun Ave	1.6
Lincoln Dr	3007		Kelly Dr	Ridge Ave	0.02
	4013	67029	Cliveden St	Mt Pleasant Ave	1.14
	4013		Mt Pleasant Ave	Allens La	0.2
Lindbergh Blvd	3021	67309	Grays Ave	Elmwood Ave	0.47
	3025	67309	Elmwood Ave	65th St	0.8
Linden Ave	1016	67295	Academy Rd	I-95/Delaware Expy	0.95
Logan Circle	3007	67002			0.05
Market St	2004	67360	Columbus Blvd	Juniper St	1.14
	3010	67313	15th St	Cobbs Creek Pkwy	4.29
	3	67313	Cobbs Creek Pkwy	City Limits	0.11
Marshall Rd	3031	67284	Cobbs Creek Pkwy	City Limits	0.06
Midvale Ave	4011	67363	Kelly Dr	Wissahickon Ave	1.22
Mt Airy Ave	4021	67354	Germantown Ave	Easton Rd	0.98
Moyamensing Ave	291	67023	Broad St	20th St	0.62
Old York Rd	611	67014	67th Ave	Cheltenham Ave	0.53
Olney Ave	4004	67346	Rising Sun Ave	Wister St	2.25
Oregon Ave	2001	67025	Columbus Blvd	Broad St	1.73
Oxford Ave	232	67341	Roosevelt Blvd	Rhawn St	3.05
Parkside Ave	3017	67369	Girard Ave	52nd St	1.12
Park Line Dr	4013	67029	Walnut La	Cliveden St	0.07
Passyunk Ave	3019	67310	Broad St	Essington Ave	2.72
Pennsylvania Ave	2006	67030	Spring Garden St	25th St	0.18
	3011	67301	25th St	26th St	0.1
Penrose Ave	291	67023	20th St	Pattison Ave	0.54
	291		Pattison Ave	26th St	0.26
	291		26th St	Island Ave	2.44
Philmont Ave	1030	67346	Byberry Rd	City Limits	1.02
Poplar St	2008	67302	24th St	W College Ave	0.09
Princeton Ave	73	67328	Frankford Ave	State Rd	0.81
	1010	67328	State Rd	I-95/Delaware Expy	0.11
Race St	3009	67004	6th St	8th St	0.17
Rhawn St	1014	67359	Pine Rd	State Rd	4.56
Richmond St	2001	67348	Delaware Ave	Lehigh Ave	0.62
	2001		Lehigh Ave	Bridge St	3.05

STREET	SR#	LR#	FROM	TO	MILES
Ridge Ave	3009		Spring Garden St	33rd St	2.24
	13	67030	33rd St	Hunting Park Ave	0.86
	3009	67030	Hunting Park Ave	Allegheny Ave	0.38
	3009	67030	Allegheny Ave	Gustine Lk Ramp (S)	1.03
	3009	67029	Gustine Lk Ramp (S)	Main St	0.31
	3009		Main St	Northwestern Ave	4.7
Rising Sun Ave	1001	67326	Roosevelt Blvd	Cottman Ave	3.08
Robbins St	13	67327	Roosevelt Blvd	Frankford Ave	0.91
	1024	67327	Frankford Ave	Keystone St	0.64
Roberts Ave	4009	67364	Henry Ave	Wayne Ave	1.31
Roosevelt Blvd	1	67009	9th St	City Limits	11.7
Roosevelt Expy	1	67058	I-76/Schuylkill Expy	9th St	2.95
Schuylkill Ave W	3026	67057	Walnut St	Arch St	0.29
Sedgley Ave	2016		Allegheny Ave/9th St	Allegheny Ave/11th St	0.2
Snyder Ave	2002	67372	Columbus Blvd	Vare Ave	2.81
S College Ave	2008	67302	24th St	Girard Ave	0.26
S Penn Sq	3022	67002	Broad St	15th St	0.07
Spring Garden St	2006	67030	Columbus Blvd	Eakins Oval (E)	2.18
	3014	67002	Eakins Oval (W)	Lancaster Ave	1.13
State Rd	73	67350	Levick St	Cottman Ave	1.11
	1007	67350	Cottman Ave	Grant Ave	2.86
	1007		Grant Ave	City Limits	0.07
Stenton Ave	4002	67017	Broad St	Ogontz Ave	0.45
	4002	67049	Ogontz Ave	Bethlehem Pike	3.94
	3003	46086	Bethlehem Pike	Northwestern Ave	0.73
Tacony St	1007	67350	Adams Ave	Bridge St	1.01
	1007	67048	Bridge St	Levick St	1.43
Torresdale Ave	1004	67331	Kensington Ave	Linden Ave	5.93
University Ave	3003	67278	34th St	Baltimore Ave	0.63
Upsal St	4017	67345	Germantown Ave	Cheltenham Ave	2.15
Vare Ave	76	67278	Passyunk Ave	34th St	0.7
Verree Rd	1001	67324	Oxford Ave	Bustleton Ave	4.07
Vine St (service rds)	2676	67045	7th St	20th St	1.09
Wadsworth Ave	4021	67354	Thouron Ave	Cheltenham Ave	0.46
Walnut La	4013		Ridge Ave	Park Line Dr	0.8
	4015	67345	Park Line Dr	Wayne Ave	0.78
Walnut St	3006	67319	Columbus Blvd	Broad St	1.12
	3	67319	Broad St	Schuylkill Ave W	1.01
	3	67352	Schuylkill Ave W	Cobbs Creek Pkwy	3.35
Washington La	4007	67304	Wayne Ave	Germantown Ave	0.91
	4019	67304	Germantown Ave	Cheltenham Ave	1.93
Wayne Ave	4007	67305	Windrim Ave	Washington La	1.74
	4015	67345	Washington La	Lincoln Dr	0.27
Welsh Rd	1011	67321	Willits Rd	Roosevelt Blvd	1.02
	532	67321	Roosevelt Blvd	Bustleton Ave	0.93
	1011	67321	Bustleton Ave	City Limits	1.09
W College Ave	2006	67030	Poplar St	Girard Ave	0.09
Whitaker Ave	1003	67339	Erie Ave	Roosevelt Blvd	1.7
Whitby Ave	3017	67370	52nd St	Cobbs Creek Pkwy	0.67
Willits Rd	1011	67321	Welsh Rd	Academy Rd	1.39

STREET	SR#	LR#	FROM	TO	MILES
Wissahickon Ave	4003	67330	Hunting Park Ave	Allens La	3.26
Woodhaven Rd	1022	67334	City Limits	Roosevelt Blvd	1.49
	63	1029	Roosevelt Blvd	City Limits	2.6
Woodland Ave	3021	67309	Grays Ferry Ave	49th St	0.02
	3013	67281	Island Ave	City Limits	0.12
5th St	2003		Race St	Spring Garden St	0.61
6th St	2005		Race St	Spring Garden St	0.61
8th St	3009		Race St	Vine St	0.11
15th St	3022	67002	S Penn Sq	Kennedy Blvd	0.11
	3029	67006 A	Kennedy Blvd	Vine St	0.31
16th 5t	3027	67006 B	Kennedy Blvd	Vine St	0.31
25th St	2006		Pennsylvania Ave	Poplar St	0.38
26th St	3003	67278	Penrose Ave	I-76/Schuylkill Expy	1.13
	3011	67031	Pennsylvania Ave	Girard Ave	0.41
29th St	3011	67030	Girard Ave	Allegheny Ave	1.99
	3011		Allegheny Ave	Hunting Park Ave	0.07
30th St	3031	67005	Market St	Arch St	0.09
33rd St	3005	67060	Convention Ave	Lancaster Ave	0.47
	13	67333	Girard Ave	Ridge Ave	1.19
34th St	3003	67278	I-76/Schuylkill Expy	University Ave	0.41
	3035	67316	Market St	Lancaster Ave	0.09
38th St	13	67278	Baltimore Ave	Chestnut St	0.32
	13		Chestnut St	Lancaster Ave	0.35
	3003	67278	Lancaster Ave	Haverford Ave	0.22
42nd St	3023	67282	Chester Ave	Baltimore Ave	0.06
49th St	3021	67309	Grays Ave	Woodland Ave	0.14
52nd St	3023	67282	Kingsessing Ave	Chester Ave	0.09
	3017	67370	Whitby Ave	Haverford Ave	0.9
	3017		Haverford Ave	Lancaster Ave	0.82
	3017		Lancaster Ave	Parkside Ave	0.32
58th St	3015	67368	Hoffman Ave	Baltimore Ave	0.18
63rd St	3004	67371	Passyunk Ave	Lindbergh Blvd	0.49
	3015	67367	Market St	City Ave	1.87
65th St	3004	67320	Lindbergh Blvd	Chester Ave	1.02
	3004	67282	Chester Ave	City Limits	0.29
84th St	3002	67280	Bartram Ave	City Limits	0.8

STATE HIGHWAYS

Philadelphia Water Department

APPENDIX Vj

Back to Appendix V

WARD MAP

0 0.5 1 2 3 Miles

Philadelphia Water Department

Appendix Vk Back to Appendix V

CONTACT INFORMATION

Appendix VI

Should you find that any contact information is outdated, please leave a message on the Comment page. Your help will be greatly appreciated by all users of this manual, and in turn they may help you. {32} {35} {65}

a – Contact Information for City Departments and City and Private Utilities (Also see Section 6 [114])
b – PWD Contact Information
c – District Surveyor Contact Information
d – PGW Distribution Construction Areas Contact Information

The accuracy of the contacts in Appendix VIa is not guaranteed. If you have any questions, please contact the Streets Department Right of Way Unit at
215-686-5525/5531
Nicole Szarka

Committee Of Highway Supervisors Membership
January 1, 2015

City Departments/Agencies/Authorities

Company	Contact	Address/Email	Telephone/Fax/Cell
City Planning Commission	Sarah Chiu	1515 Arch Street, One Parkway, 13th Floor Philadelphia, PA 19102 sarah.chiu@phila.gov	T: (215)-683-4626
PennDOT	Calene Maroski *County Permits Supervisor*	1901 Ruffner Street Philadelphia, PA 19140 camaroski@pa.gov	T: (215) 225-1415
	Matthew Miele *District Permits Manager*	7000 Geerdes Blvd King of Prussia, PA 19406 mmiele@pa.gov	T: (610) 205-6795 F: (610) 205-6599
PIDC	Edward Duffy	2600 Center Square West, 1500 Market St Philadelphia, PA 19102-2126 edduffy@pidc-pa.org	
Philadelphia Department of Commerce	Vincent Dougherty	One Parkway, 1515 Arch Street, 12th Floor Philadelphia, PA 19102 Vincent.Dougherty@phila.gov	
Police (Traffic Division)	Captain Helker	police.co_traffic@phila.gov thomas.helker@phila.gov	T: (215) 685-1554
	Lieutenant Anderson	police.co_traffic@phila.gov michael.anderson@phila.gov	T: (215) 685-1554
Public Property	Lowanda Hebert	1000 Municipal Services Building 1401 John F. Kennedy Boulevard lowanda.scott@phila.gov	T:(215) 686-4442
Cable Franchise Manager	Mark McLaughlin	Room 632 City Hall Philadelphia, PA 19107 mark.mclaughlin@phila.gov	T:(215) 686-9950 F:(215) 686-4958

Back to Appendix VI

City Departments/Agencies/Authorities

Company	Contact	Address/Email	Telephone/Fax/Cell
Cable Franchise Manager	James Napier	Room 632 City Hall Philadelphia, PA 19107 james.napier@phila.gov	T:(215) 686-9946 F:(215) 686-4958
Capital Program Office	Monique Vincent	1515 Arch Street, 11th Floor Philadelphia, PA 19107 monique.vincent@phila.gov	T:(215) 683-4440 F:(215) 683-4498
Redevelopment Authority	Mike Maenner	1234 Market Street, 16th Floor Philadelphia, PA 19107 Michael.Maenner@pra.phila.gov	T:(215) 209-8713 M:(215) 964-2061
		Streets Department	
Deputy Commissioner of Transportation	Michael A. Carroll	1401 John F. Kennedy Boulevard, Room 900 Philadelphia, PA 19102 michael.a.carroll@phila.gov	
Right-Of-Way Unit	Patrick O'Donnell *Right of Way Manager*	1401 John F. Kennedy Blvd, Room 960 Philadelphia, PA 19102 patrick.o'donnell@phila.gov	T:(215) 686-5621
	Harry Wilson *CHS Chairman*	1401 John F. Kennedy Blvd, Room 960 Philadelphia, PA 19102 harry.wilson@phila.gov	T:(215) 686-5524
	John Scanlon *Permits*	1401 John F. Kennedy Blvd, Room 960 Philadelphia, PA 19102 john.scanlon@phila.gov	T:(215) 686-5525 F: (215) 686-5062

City Departments/Agencies/Authorities

Company	Contact	Address/Email	Telephone/Fax/Cell
Street Lighting	Kristin Del Rossi	840 Municipal Services Building 1401 John F. Kennedy Boulevard kristin.del.rossi@phila.gov	T:(215) 686-5517
Streets Design Unit	Vadim Fleysh *Chief Design Engineer*	1401 John F. Kennedy Blvd, Room 830 Philadelphia, PA 19102 vadim.fleysh@phila.gov	T:(215) 686-5574
	Chris Menna *Bridge Design*	1401 John F. Kennedy Blvd, Room 830 Philadelphia, PA 19102 chris.menna@phila.gov	T:(215) 686-5573 F:(215) 686-5059
	Smitha Mathew *Transportation Design*	1401 John F. Kennedy Blvd, Room 830 Philadelphia, PA 19102 smitha.mathew@phila.gov	T:(215) 686-5514
Transportation, Planning and Analysis	Nancy Sen	1401 John F. Kennedy Blvd, Room 940 Philadelphia, PA 19102 nancy.sen@phila.gov	T:(215) 686-5509 F:(215) 686-5064
Traffic Engineering	Kasim Ali	980 Municipal Services Building 1401 John F. Kennedy Boulevard kasim.ali@phila.gov	T:(215) 686-5572

Committee Of Highway Supervisors Membership

January 1, 2015

Utility Members

Company	Contact	Address/Email	Telephone/Fax/Cell
Abovenet Communications *(now the Zayo Group)*	Jack Howells	170 Robbins Road Downingtown, PA 19335 john.howells@zayo.com	T:(484) 696-3904 F:(484) 696-3910 C:(610) 476-1634
	Chris Ricciuti	170 Robbins Road Downingtown, PA 19335 chris.ricciuti@zayo.com	T:(484) 696-3903 F:(484) 696-3910
Cavalier Telephone	Harry Sheppard	18 Shea Way Newark, Delaware 19711 hmsheppard@cavtel.com	T:(302) 224-7121
Center City District	Hal Welch	660 Chestnut Street Philadelphia, PA 19107 hwelch@centercityphila.org	T:(215) 440-5528 F:(215) 922-7672
Comcast	Jack Clayton	4400 Wayne Avenue Philadelphia, PA 19140 Jack_Clayton@cable.comcast.com	T:(215) 339-7912 F:(215) 339-7971 C:(215) 920-2233
	Alvin Munson	4400 Wayne Avenue Philadelphia, PA 19140 Al_Munson@cable.comcast.com	
Drexel University	Paul Tobin	Trades & Facilities Management 330 Market Street - 16th Floor Philadelphia, PA 19104 pft26@drexel.edu	T:(215) 895-6901 T:(215) 895-2822
FiberTech Networks	Allan Lane	rocky31944@aol.com alane@fibertech.com	T:(215) 802-8674 T:(215) 884-1651 C:(585) 255-0160

Committee Of Highway Supervisors Membership

January 1, 2015

Utility Members

Company	Contact	Address/Email	Telephone/Fax/Cell
Level 3 Communications	Timothy Eskridge OSP Project Mgr.	3020 Market Street Philadelphia, PA 19104 tim.eskridge@level3.com	T: (610) 785-1469 F: (720) 567-3827
	Adolfo Colon	3020 Market Street, 3rd Floor Philadelphia, PA 19104 adolfo.colon@level3.com	
	Guy Haslett	3020 Market Street, 3rd Floor Philadelphia, PA 19104 guy.haslett@level3.com	
Level 3 Communications	Rocco Parise	3020 Market Street, 3rd Floor Philadelphia, PA 19104 RoccoParise@level3.com	
Lightower Fiber Networks **(Attn: Fiber Engineering & Construction Team)**	Thomas Sprigle Sr. Fiber & Construction Mgr. Mid-Atlantic Region	196 Van Buren Street Suite 250 Herndon, VA 20170 tsprigle@lightower.com www.lightower.com	T:(443) 250-1873 C:(443) 250-1873
MCI Worldcom **(Verizon Enterprise Solutions)**	Donald Lugg	201 Centennial Avenue Piscataway, NJ 08854 donald.lugg1@verizon.com	T:(917) 295-3050
	Tom Roberts	201 Centennial Avenue Piscataway, NJ 08854 tom.h.roberts@verizon.com	T:(732) 885-2417 C:(917) 295-3050 T:(610) 656-1252

Committee Of Highway Supervisors Membership

January 1, 2015

Utility Members

Company	Contact	Address/Email	Telephone/Fax/Cell
PECO Energy	Mark Allgaier	830 S. Schuylkill Avenue Philadelphia, PA 19146 mark.allgaier@exeloncorp.com	T:(215) 731-3232 F:(215) 731-3195
	Jim Bezila	830 S. Schuylkill Avenue Philadelphia, PA 19146 james.bezila@peco-energy.com	T:(215) 731-3095 (801) C:(610) 745-9488
	Lou Robinson	830 S. Schuylkill Avenue Philadelphia, PA 19146 louis.robinson@exeloncorp.com	T:(215) 731-3283 F:(215) 731-3195
	Mellanie Lassiter	830 S. Schuylkill Avenue Philadelphia, PA 19146 Mellanie.Lassiter@exeloncorp.com	T:(215) 731-3235
Philadelphia Gas Works	Ryan Bream	800 W. Montgomery Avenue Philadelphia, PA 19122 ryan.bream@pgworks.com	T:(215) 684-6719 F:(215) 684-6853
Philadelphia Gas Works	Thomas Pendergast, Director Engineering, Design & Constructio *Distribution Department*	800 W. Montgomery Avenue Philadelphia, PA 19122 thomas.pendergast@pgworks.com	T:(215) 684-6344 F:(215) 684-6853

Committee Of Highway Supervisors Membership

January 1, 2015

Utility Members

Company	Contact	Address/Email	Telephone/Fax/Cell
Philadelphia Water Department			
Design Branch	Mike Quinn *Primary Contact*	1101 Market St, Aramark Tower, 2nd Floor Philadelphia, PA 19107 michael.quinn@phila.gov	T:(215) 685-6309
	William Dobbins *Secondary Contact*	1101 Market St. Aramark Tower, 2nd Floor Philadelphia, PA 19107 william.dobbins@phila.gov	T:(215) 685-6286
	Erik Smith	1101 Market St, Aramark Tower, 2nd Floor Philadelphia, PA 19107 erik.smith@phila.gov	T:(215) 685-6270
Construction Unit	William Connors *Primary Contact*	1101 Market St, Aramark Tower, 2nd Floor Philadelphia, PA 19107 william.connors@phila.gov	T:(215) 685-6372 F:(215) 685-6211 C:(215) 200-4413
	Robert Rotermund	1101 Market Street, Aramark Tower, 2nd Floor Philadelphia, PA 19107 robert.rotermund@phila.gov	T:(215) 685-6351
Qwest Communications Corp	George McElvain	1860 Lincoln Street, 2nd Floor Denver, Colorado 80295 george.mcelvain@qwest.com	T:(303) 837-3926 F:(303) 837-3984 C:(720) 260-2514
RCN Telecom SVCS	Kevin Cochran RF/CAD Engineer	3 Raymond Drive Havertown, PA 19083-3153 Kevin.Cochran@rcn.net	T:(484) 461-6020 F:(484) 461-6084
	Kevin Cochran	Northampton Office 5508 Nor Bath Blvd. Northampton, PA 18067	T:(610) 440 8113 C:(610) 636 1454 F:(610) 443 2832
SEPTA	Robin Youmans	1234 Market Street Philadelphia, PA 19107 ryoumans@septa.org	T:(215) 580-7635 C:(267)402-8522

Committee Of Highway Supervisors Membership

January 1, 2015

Utility Members

Company	Contact	Address/Email	Telephone/Fax/Cell
Sunesys	David Hayward	185 Titus Avenue Warrington, PA 18976 dhayward@sunesys.com	T: (267) 927-2033 F: (267) 927-2090
	Jason Wehn	185 Titus Avenue Warrington, PA 18976 jwehn@sunesys.com	T: (267) 927-2040
Teleport Communications Group (AT&T Local Services)	Mike Henderson	mh6765@att.com	T:(732) 896-5449
University of Pennsylvania	Richard Russell	3101 Walnut Street Philadelphia, PA 19104 russell1@upenn.edu	T: (215) 898-5835 F: (215) 898-2040
Veolia Energy North America	Howard Sellers Manager, Distribution Engineering	2600 Christian Street Philadelphia, PA 19146 hsellers@veolia.com	T:(267) 350-5848 F:(267) 350-5849
	Reji Sreedharan	2600 Christian Street Philadelphia, PA 19146 reji.sreedharan@veolia.com	
	Bill Lindquist	2600 Christian Street Philadelphia, PA 19146 bill.lindquist@veolia.com	
	Rich Deaver	2600 Christian Street Philadelphia, PA 19146 rich.deaver@veolia.com	

Committee Of Highway Supervisors Membership

January 1, 2015

Utility Members

Company	Contact	Address/Email	Telephone/Fax/Cell
Verizon Communications	Brian M. Magee Manager, OSPE	900 Race Street, 6th Floor Philadelphia, PA 19107 brian.m.magee@verizon.com	T:(215) 351-6051 C:(610) 368-7786
	John Alessandrini Lead Specialist Engineer Verizon Business	630 Clark Avenue King of Prussia, PA 19406 john.alessandrini@verizon.com	T:(610) 337-6707 C:(610) 517-8456 F:(610) 337-6720
	Anthony Portolese OSP Engineering	900 Race Street, 6th Floor Philadelphia, PA 19107 anthony.s.portolese@verizon.com	T:(215) 351 6042 F:(215) 351-8222
XO Communications	Scott Dreiling	1220 Broadcasting Rd. Wyomissing, PA 19610 scott.j.dreiling@xo.com	T:(610) 288-5329 F:(610) 288-6700 C:(610) 842-4323
	Mike Harrison	1220 Broadcasting Rd. Wyomissing, PA 19610 mharrison@xo.com	T:(610) 288-5644 F:(610) 288-6721 C:(610) 842-0043
* acquired by Level 3			
Zayo Group *(formerly Abovenet Communications)*	Jack Howells	170 Robbins Road Downingtown, PA 19335 john.howells@zayo.com	T:(484) 696-3904 F:(484) 696-3910 C:(610) 476-1634
	Chris Ricciuti	170 Robbins Road Downingtown, PA 19335 chris.ricciuti@zayo.com	T:(484) 696-3903 F:(484) 696-3910

PWD Design Unit Contact List

Contact	Address/Email	Telephone
Vahe Hovsepian Design Branch Manager	1101 Market Street 2nd Floor Philadelphia, PA 19107 Vahe.Hovsepian@phila.gov	T: 215-685-6278
William Dobbins Design Branch Assistant Manager	1101 Market St. 2nd Floor Philadelphia, PA 19107 William.Dobbins@phila.gov	T: 215-685-6286
Jeffrey Twardzik Engineering Supervisor 2 Sewer/Water/Sewer Lining/Water Lining/Sewer Gunite	1101 Market Street 2nd Floor Philadelphia, PA 19107 Jeffrey.Twardzik@phila.gov	T: 215-685-6288
Michael F. Quinn Engineering Supervisor 2 Street Department & State Highway Coordinator	1101 Market St. 2nd Floor Philadelphia, PA 19107 Michael.Quinn@phila.gov	T: 215-685-6309

PWD Design Unit Contact List

Contact	Address/Email	Telephone
Khadija Tadimi Engineering Specialist Green Infrastructure	1101 Market St. 2nd Floor Philadelphia, PA 19107 khadija.tadimi@phila.gov	T: 215-685-6381
Walid A. El-Morshedy Design and Construction Project Manager Sewer/Water/Sewer Lining/Water Lining/Sewer Gunite/PennDOT HOP	1101 Market St. 2nd Floor Philadelphia, PA 19107 Walid.A.El-Morshedy@phila.gov	T: 215-685-6290
Donna McCrary Front Office Water Service Lists	Donna.mccrary@phila.gov	

PWD Planning Unit Contact List

Contact	Address/Email	Telephone
Jeffrey Simmet Planning Staff Engineering	1101 Market St. 2nd Floor Philadelphia, PA 19107 Jeffrey.Simmet@phila.gov	T: 215-685-6329

District	Surveyor	Office
2	Christian Petrowsky	S.W. Corner of 11th Street & Wharton Street 19147 2nd floor 685-1865 Fax. 685-1851
4	Michael Labrum	Bustleton Avenue & Bowler Street 19115 685-0350, 0351 Fax. 685-0354
5	Frank McAnaney	6601 Rising Sun Avenue 19111 685-0585, 0586 Fax. 685-0561
7	Karl Kriegh	6448 Woodland Avenue 19142 685-2668, 2669 Fax. 685-2661
9	John Towey	4000 North American Street 19140 685-3050, 3051, 3053 Fax. 685-3052
CP	Tom Marro	M.S.B. 1401 John F. Kennedy Boulevard City Plans Unit / 8th Floor 686-5598, 5567 Fax. 686-5182
	Frank Morelli	Survey Bureau Manager

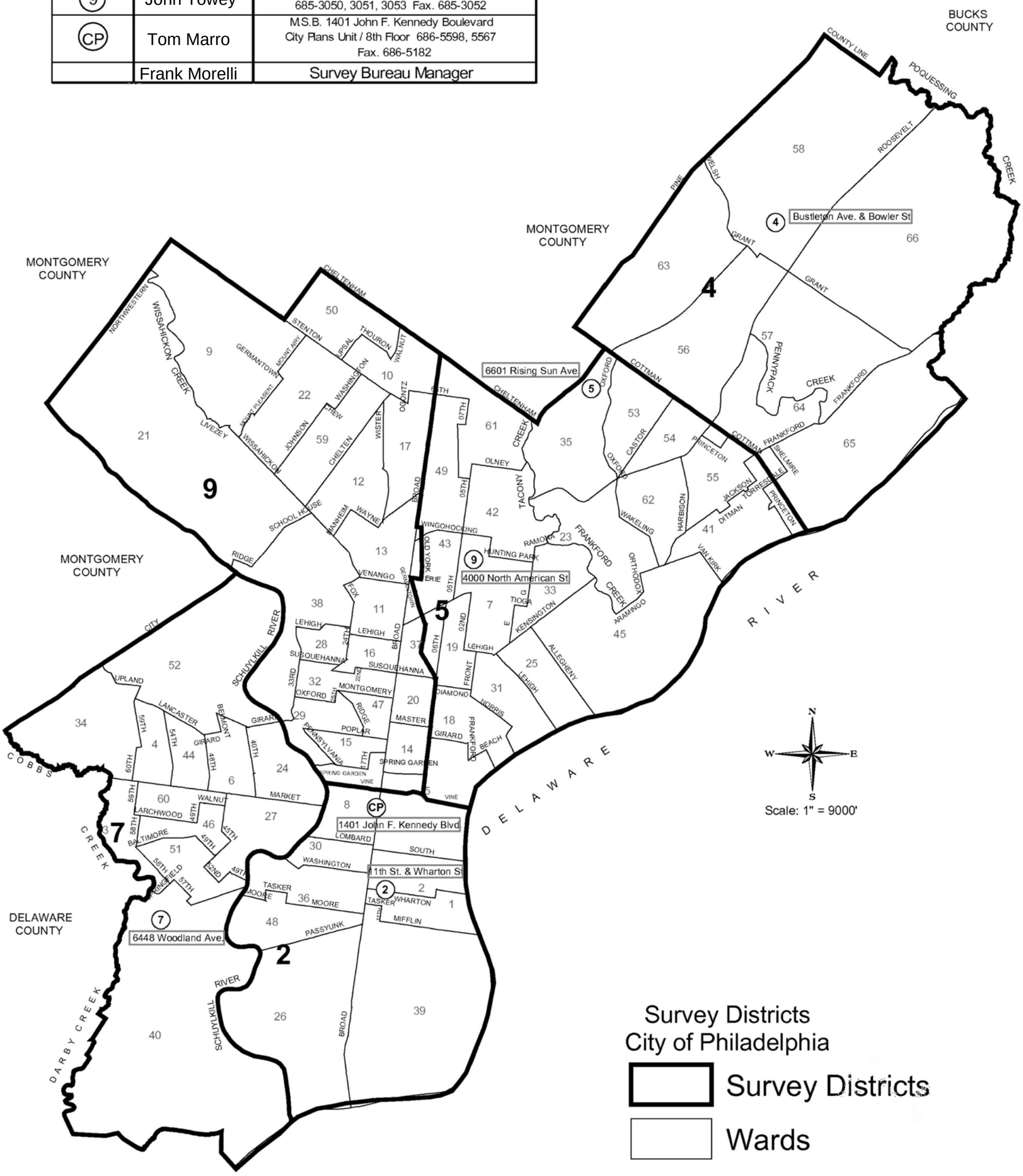

City of Philadelphia Department of Streets

Map Modified June 5, 2009 - MxS

Field Operations

Distribution Areas

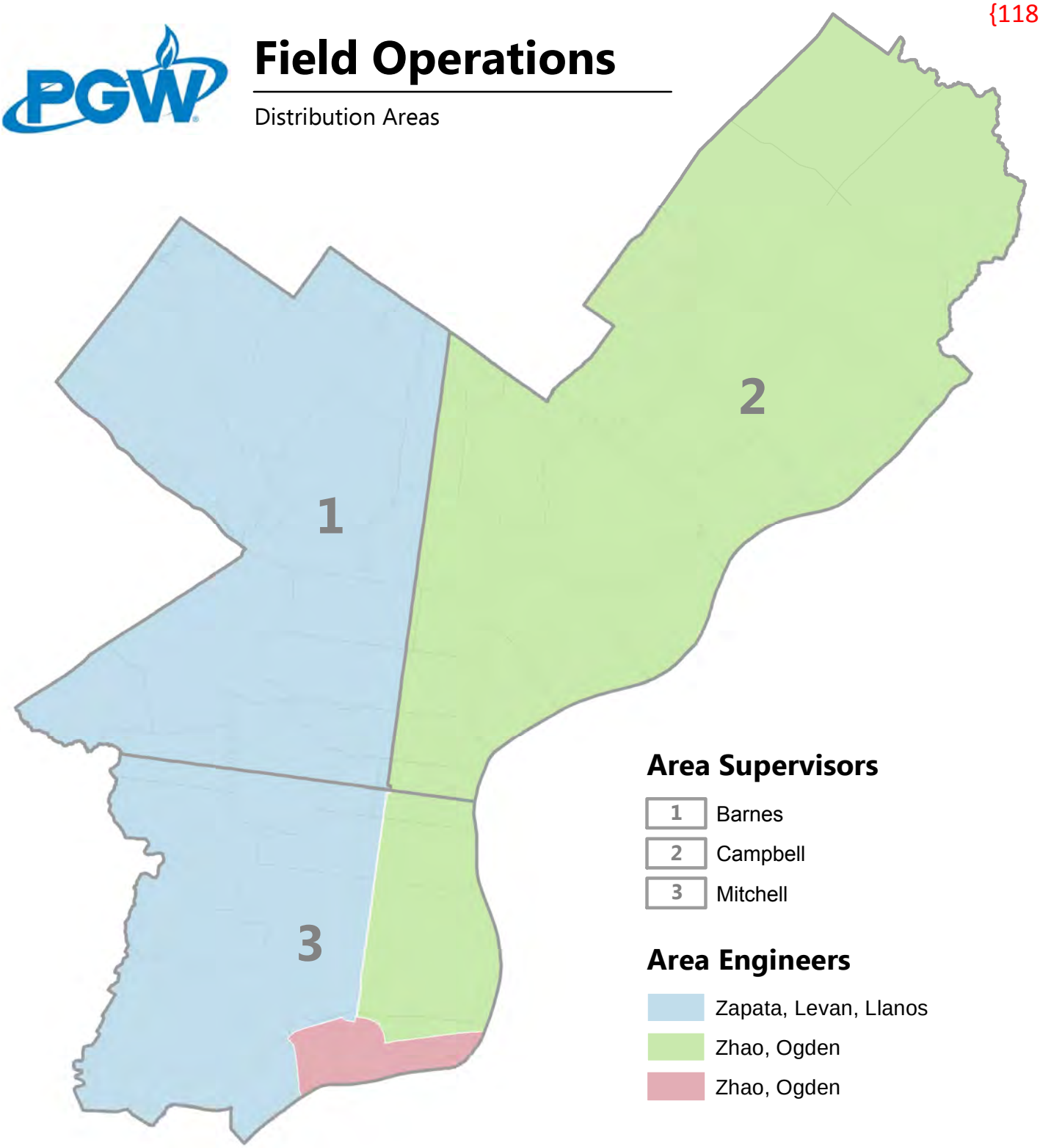

SUPERVISORS	ENGINEERS
Darnell Barnes 267-249-7230 Chris Mitchell 267-249-6756 Robert Campbell 267-249-6977	Andrew Levan: 215-684-6053 andrew.levan@pgworks.com Darcela Llanos: 215-684-6420 darcela.llanos@pgworks.com Matt Ogden: 215-684-6785 matthew.ogden@pgworks.com Alejandro Zapata: 267-249-7476 alejandro.zapata@pgworks.com Wenbin Zhao: 215-684-6504 wenbin.zhao@pgworks.com

Back to Appendix VI

D.I. FITTINGS

Appendix VII

a – Weight of Ductile Iron Fittings

{76}

- Crosses
- Tees
- Bends
- Offsets
- Reducers
- Sleeves
- Caps and Plugs

MECHANICAL JOINT CROSSES

RUN in.	BRANCH in.	WEIGHT lbs.	"H" in.	"T" in.	"J" in.	"Tl" in.	MATERIAL	RATING psi	SOURCE
3	3	33	4.00	0.34	4.00	0.34	25	250	C153
4	3	38	4.00	0.34	4.00	0.34	25	250	C153
4	4	42	4.00	0.34	4.00	0.34	25	250	C153
6	3	58	4.00	0.36	5.00	0.34	25	250	C153
6	4	62	4.00	0.36	5.00	0.34	25	250	C153
6	6	72	5.00	0.36	5.00	0.36	25	250	C153
8	4	84	4.00	0.38	6.50	0.34	25	250	C153
8	6	105	5.00	0.38	6.50	0.36	25	250	C153
8	8	108	6.50	0.38	6.50	0.38	25	250	C153
10	4	98	4.00	0.40	7.50	0.34	25	250	C153
10	6	110	5.00	0.40	7.50	0.36	25	250	C153
10	8	138	6.50	0.40	7.50	0.38	25	250	C153
10	10	144	7.50	0.40	7.50	0.40	25	250	C153
12	4	115	4.00	0.47	8.75	0.34	25	250	C153
12	6	129	5.00	0.47	8.75	0.36	25	250	C153
12	8	158	6.50	0.47	8.75	0.38	25	250	C153
12	10	180	7.50	0.47	8.75	0.40	25	250	C153
12	12	214	8.75	0.47	8.75	0.47	25	250	C153
16	6	250	5.00	0.50	11.50	0.36	DI	350	C153
16	8	264	6.50	0.50	11.50	0.38	DI	350	C153
16	10	287	7.50	0.50	11.50	0.40	DI	350	C153
16	12	310	8.75	0.50	11.50	0.47	DI	350	C153
16	14	363	11.50	0.50	11.50	0.50	DI	350	C153

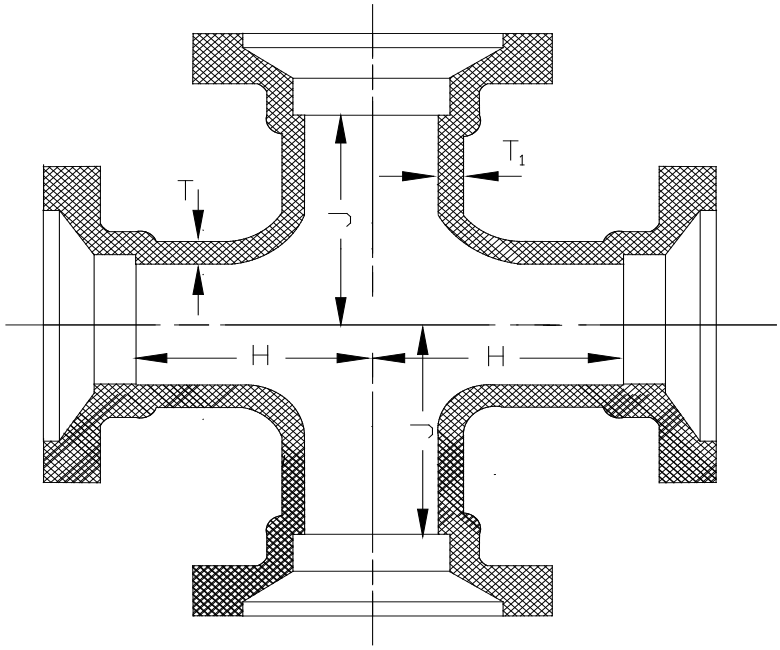

MECHANICAL JOINT CROSSES
(CONTINUED)

RUN in.	BRANCH in.	WEIGHT lbs.	"H" in.	"T" in.	"J" in.	"Tl" in.	MATERIAL	RATING psi	SOURCE
16	16	410	11.50	0.50	11.50	0.70	DI	350	C153
18	6	625	13.00	0.75	15.50	0.55	DI	350	C110
18	8	655	13.00	0.75	15.50	0.60	DI	350	C110
18	10	685	13.00	0.75	15.50	0.68	DI	350	C110
18	12	725	13.00	0.75	15.50	0.75	DI	350	C110
18	14	870	16.50	0.75	16.50	0.66	DI	350	C110
18	16	930	16.50	0.75	16.50	0.70	DI	350	C110
18	18	995	16.50	0.75	16.50	0.75	DI	350	C110
20	6	760	14.00	0.80	14.00	0.55	DI	350	C110
20	8	790	14.00	0.80	17.00	0.60	DI	350	C110
20	10	820	14.00	0.80	17.00	0.68	DI	350	C110
20	12	860	14.00	0.80	17.00	0.75	DI	350	C110
20	14	905	14.00	0.80	17.00	0.66	DI	350	C110
20	16	1,085	18.00	0.80	18.00	0.70	DI	350	C110
20	18	1,155	18.00	0.80	18.00	0.75	DI	350	C110
20	20	1,230	18.00	0.80	18.00	0.80	DI	350	C110
24	6	1,025	15.00	0.89	19.00	0.55	DI	350	C110
24	8	1,045	15.00	0.89	19.00	0.60	DI	350	C110
24	12	1,260	15.00	0.89	19.00	0.75	DI	350	C110
24	16	1,375	15.00	0.89	19.00	0.70	DI	350	C110
24	20	1,450	22.00	0.89	22.00	0.80	DI	350	C110
24	24	1,835	22.00	0.89	22.00	0.89	DI	350	C110
30	12	1,865	18.00	1.03	23.00	0.75	DI	250	C110
30	24	2,675	18.00	1.03	23.00	0.89	DI	250	C110
30	30	3,075	18.00	1.03	23.00	1.03	DI	250	C110

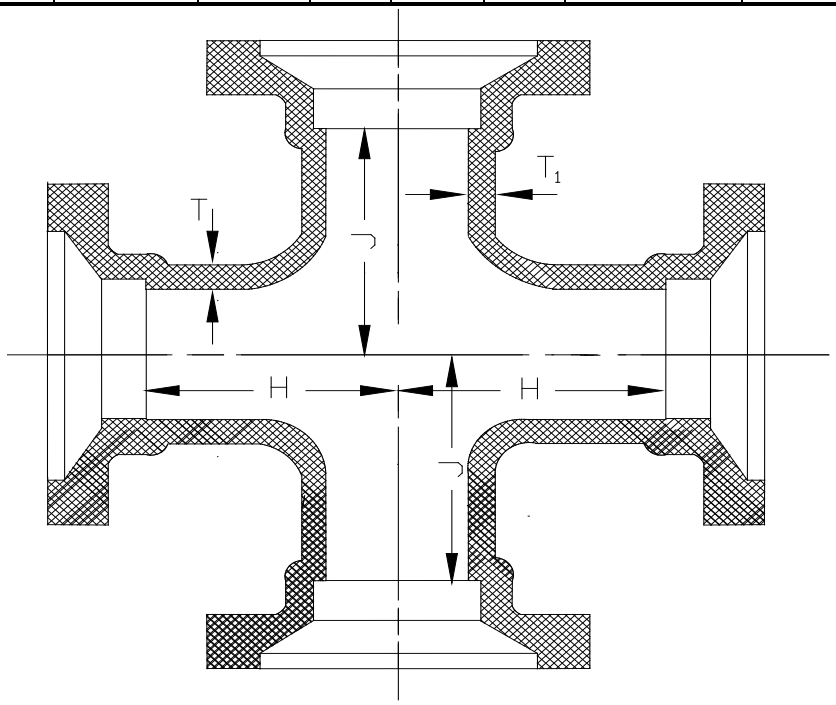

MECHANICAL JOINT CROSSES

(CONTINUED)

RUN in.	BRANCH in.	WEIGHT lbs.	"H" in.	"T" in.	"J" in.	"Tl" in.	MATERIAL	RATING psi	SOURCE
36	12	2,630	20.00	1.15	26.00	0.75	DI	250	C110
36	20	2,805	20.00	1.15	26.00	0.80	DI	250	C110
36	24	2,910	20.00	1.15	26.00	0.89	DI	250	C110
36	30	3,965	28.00	1.15	28.00	1.03	DI	250	C110
36	36	4,370	28.00	1.15	28.00	1.15	DI	250	C110
42	12	3,640	23.00	1.28	20.00	0.75	DI	250	C110
42	14	3,675	23.00	1.28	30.00	0.66	DI	250	C110
42	16	3,715	23.00	1.28	30.00	0.70	DI	250	C110
42	18	3,755	23.00	1.28	30.00	0.75	DI	250	C110
42	20	4,645	23.00	1.28	30.00	0.80	DI	250	C110
42	24	3,910	23.00	1.28	30.00	0.89	DI	250	C110
42	30	5,040	31.00	1.28	31.00	1.03	DI	250	C110
42	36	6,655	31.00	1.78	31.00	1.58	DI	250	C110
42	42	7,145	31.00	1.78	31.00	1.78	DI	250	C110
48	12	4,955	26.00	1.42	34.00	0.75	DI	250	C110
48	14	4,985	26.00	1.42	34.00	0.66	DI	250	C110
48	16	5,025	26.00	1.42	34.00	0.70	DI	250	C110
48	18	5,065	26.00	1.42	34.00	0.75	DI	250	C110
48	20	5,115	26.00	1.42	34.00	0.80	DI	250	C110
48	24	5,210	26.00	1.42	34.00	0.89	DI	250	C110
48	30	5,495	26.00	1.42	34.00	1.03	DI	250	C110
48	36	6,790	34.00	1.42	34.00	1.15	DI	250	C110
48	42	8,815	34.00	1.96	34.00	1.78	DI	250	C110
48	48	9,380	34.00	1.96	34.00	1.96	DI	250	C110

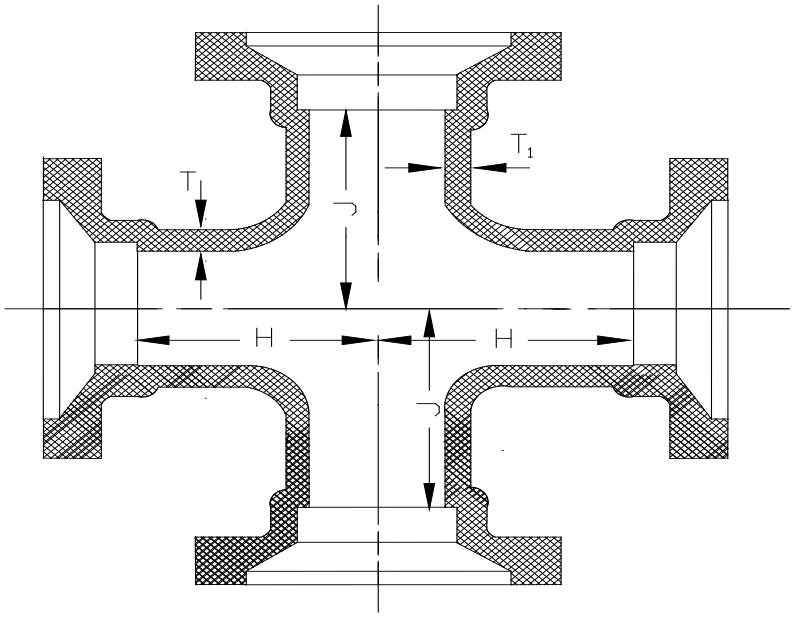

HYDRANT ANCHORING TEES

RUN in.	BRANCH in.	WEIGHT lbs.	"H" in.	"T" in.	"S" in.	"Tl" in.	MATERIAL	RATING psi	SOURCE
6	6	64	6.2	0.37	10.00	0.37	DI	350	USP
8	6	79	6.2	0.39	11.00	0.37	DI	350	USP
10	6	104	6.3	0.41	12.50	0.37	DI	350	USP
12	6	129	6.3	0.43	13.50	0.37	DI	350	USP

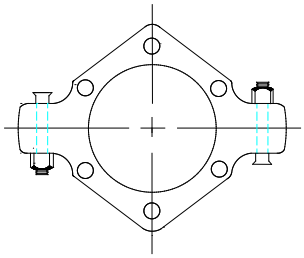

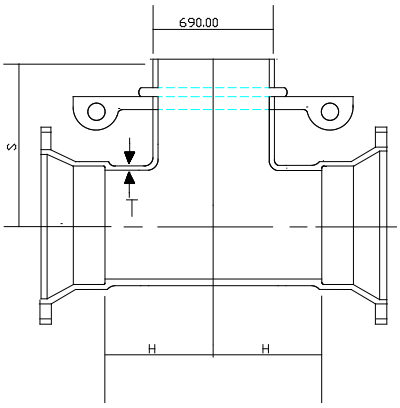

MECHANICAL JOINT TEES

•RUN in.	BRANCH in.	WEIGHT lbs.	"H" in.	"T" in.	"J" in.	"Tl" in.	MATERIAL	RATING psi	SOURCE
3	3	28	4.00	0.33	3.00	0.33	DI	350	C153
4	3	30	4.00	0.34	4.00	0.33	DI	350	C153
4	4	32	4.00	0.34	4.00	0.34	DI	350	C153
6	3	42	4.00	0.36	5.00	0.34	DI	350	C153
6	4	46	4.00	0.36	5.00	0.34	DI	350	C153
6	6	56	5.00	0.36	5.00	0.36	DI	350	C153
8	4	60	4.00	0.38	6.50	0.34	DI	350	C153
8	6	72	5.00	0.38	6.50	0.36	DI	350	C153
8	8	86	6.50	0.38	6.50	0.38	DI	350	C153
10	4	78	4.00	0.40	7.50	0.34	DI	350	C153
10	6	90	5.00	0.40	7.50	0.36	DI	350	C153
10	8	105	6.50	0.40	7.50	0.38	DI	350	C153
10	10	120	7.50	0.40	7.50	0.40	DI	350	C153
12	4	94	4.00	0.42	8.75	0.34	DI	350	C153
12	6	110	5.00	0.42	8.75	0.36	DI	350	C153
12	8	125	6.50	0.42	8.75	0.48	DI	350	C153
12	10	140	7.50	0.42	8.75	0.40	DI	350	C153
12	12	160	8.75	0.42	8.75	0.42	DI	350	C153
14	6	183	6.50	0.47	10.50	0.36	DI	350	C153
14	8	206	7.50	0.47	10.50	0.38	DI	350	C153
14	10	229	8.50	0.47	10.50	0.40	DI	350	C153
14	12	235	9.50	0.47	10.50	0.42	DI	350	C153
14	14	281	10.50	0.47	10.50	0.47	DI	350	C153

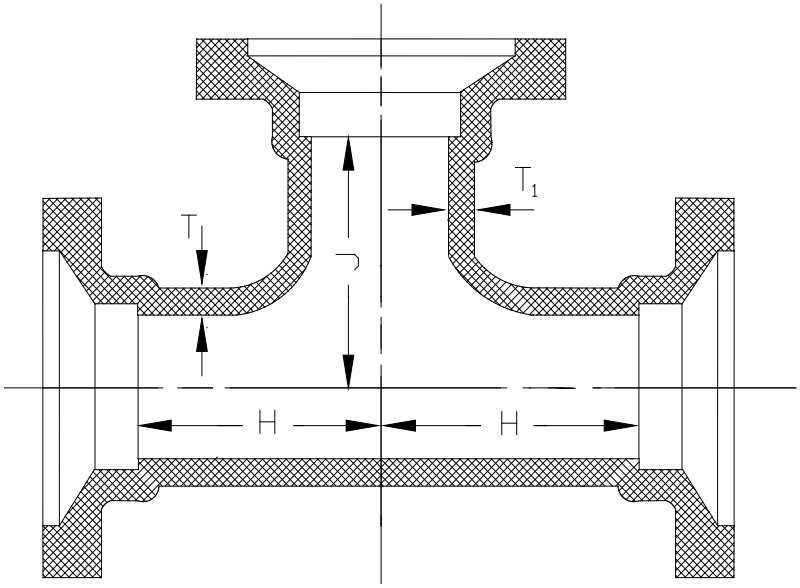

MECHANICAL JOINT TEES
(CONTINUED)

RUN in.	BRANCH in.	WEIGHT lbs.	"H" in.	"T" in.	"J" in.	"Tl" in.	MATERIA.L	RATING psi	SOURCE
16	6	229	6.50	0.50	11.50	0.36	DI	350	C153
16	8	248	7.50	0.50	11.50	0.38	DI	350	C153
16	10	265	8.50	0.50	11.50	0.40	DI	350	C153
16	12	281	9.50	0.50	11.50	0.42	DI	350	C153
16	14	317	10.50	0.50	11.50	0.47	DI	350	C153
16	16	323	11.50	0.50	11.50	0.50	DI	350	C153
18	6	275	6.50	0.54	12.50	0.36	DI	350	C153
18	8	280	7.50	0.54	12.50	0.38	DI	350	C153
18	10	286	8.50	0.54	12.50	0.40	DI	350	C153
18	12	370	9.50	0.54	12.50	0.42	DI	350	C153
18	14	415	10.50	0.54	12.50	0.47	DI	350	C153
18	16	445	11.50	0.54	12.50	0.50	DI	350	C153
18	18	490	12.50	0.54	12.50	0.54	DI	350	C153
20	6	335	6.50	0.57	14.00	0.36	DI	350	C153
20	8	383	8.00	0.57	14.00	0.38	DI	350	C153
20	10	410	9.00	0.57	14.00	0.40	DI	350	C153
20	12	432	10.00	0.57	14.00	0.42	DI	350	C153
20	14	475	11.00	0.57	14.00	0.47	DI	350	C153
20	16	530	12.00	0.57	14.00	0.50	DI	350	C153
20	18	560	13.00	0.57	14.00	0.54	DI	350	C153
20	20	605	14.00	0.57	14.00	0.57	DI	350	C153
24	6	465	13.00	0.61	17.00	0.36	DI	350	C153
24	8	475	13.00	0.61	17.00	0.38	DI	350	C153

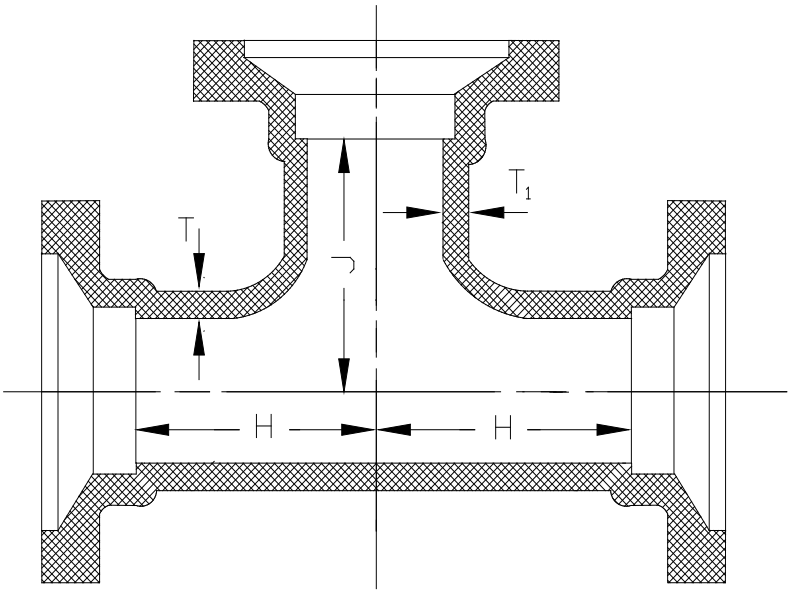

MECHANICAL JOINT TEES
(CONTINUED)

RUN in.	BRANCH in.	WEIGHT lbs.	"H" in.	"T" in.	"J" in.	"Tl" in.	MATERIAL	RATING	SOURCE
24	10	516	13.00	0.89	17.00	0.40	DI	350	C153
24	12	549	13.00	0.89	17.00	0.42	DI	350	C153
24	14	585	13.00	0.89	17.00	0.47	DI	350	C153
24	16	625	13.00	0.89	17.00	0.50	DI	350	C153
24	18	675	17.00	0.89	17.00	0.54	DI	350	C153
24	20	740	17.00	0.89	17.00	0.57	DI	350	C153
24	24	844	17.00	0.89	17.00	0.61	DI	350	C153
30	6	1,770	18.00	1.03	23.00	0.55	DI	350	C110
30	8	1,7	18.00	1.03	23.00	0.60	DI	350	C110
30	10	1,760	18.00	1.03	23.00	0.68	DI	350	C110
30	12	1,780	18.00	1.03	23.00	0.75	DI	350	C110
30	14	1,800	18.00	1.03	23.00	0.66	DI	350	C110
30	16	1,820	18.00	1.03	23.00	0.70	DI	350	C110
30	18	1,845	18.00	1.03	23.00	0.75	DI	350	C110
30	20	1,875	18.00	1.03	23.00	0.80	DI	350	C110
30	24	2,400	25.00	1.03	25.00	0.89	DI	350	C110
30	30	2,595	25.00	1.03	25.00	1.03	DI	350	C110
36	8	2,520	20.00	1.15	20.00	0.60	DI	350	C110
36	10	2,535	20.00	1.15	20.00	0.68	DI	350	C110
36	12	2,550	20.00	1.15	20.00	0.75	DI	350	C110
36	14	2,570	20.00	1.15	20.00	0.66	DI	350	C110
36	16	2,585	20.00	1.15	20.00	0.70	DI	350	C110
36	18	2,610	20.00	1.15	20.00	0.75	DI	350	C110

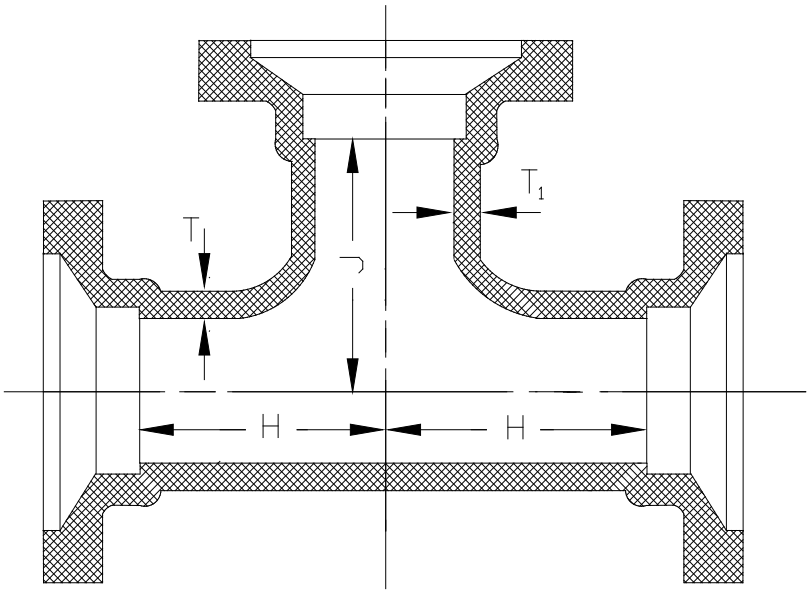

MECHANICAL JOINT TEES
(CONTINUED)

RUN in.	BRANCH in.	WEIGHT lbs.	"H" in.	"T" in.	"J" in.	"Tl" in.	MATERIAL	RATING psi	SOURCE
36	20	2,635	20.00	1.15	26.00	0.80	DI	250	C110
36	24	2,792	20.00	1.15	26.00	0.89	DI	250	C110
36	30	3,545	28.00	1.15	28.00	1.03	DI	250	C110
36	36	3,745	28.00	1.15	28.00	1.15	DI	250	C110
42	12	3,555	23.00	1.28	20.00	0.75	DI	250	C110
42	14	3,575	23.00	1.28	30.00	0.66	DI	250	C110
42	16	3,595	23.00	1.28	30.00	0.70	DI	250	C110
42	18	3,615	23.00	1.28	30.00	0.75	DI	250	C110
42	20	3,640	23.00	1.28	30.00	0.80	DI	250	C110
42	24	3,690	23.00	1.28	30.00	0.89	DI	250	C110
42	30	4,650	31.00	1.28	31.00	1.03	DI	250	C110
42	36	4,880	31.00	1.78	31.00	1.58	DI	250	C110
42	42	6,320	31.00	1.78	31.00	1.78	DI	250	C110
48	12	4,870	26.00	1.42	34.00	0.75	DI	250	C110
48	14	4,855	26.00	1.42	34.00	0.66	DI	250	C110
48	16	4,905	26.00	1.42	34.00	0.70	DI	250	C110
48	18	4,925	26.00	1.42	34.00	0.75	DI	250	C110
48	20	4,950	26.00	1.42	34.00	0.80	DI	250	C110
48	24	4,995	26.00	1.42	34.0	0.89	DI	250	C110
48	30	5,140	26.00	1.42	34.00	1.03	DI	250	C110
48	36	6,280	34.00	1.42	34.00	1.15	DI	250	C110
48	42	8,130	34.00	1.96	34.00	1.78	DI	250	C110
48	48	8,420	34.00	1.96	34.00	1.96	DI	250	C110

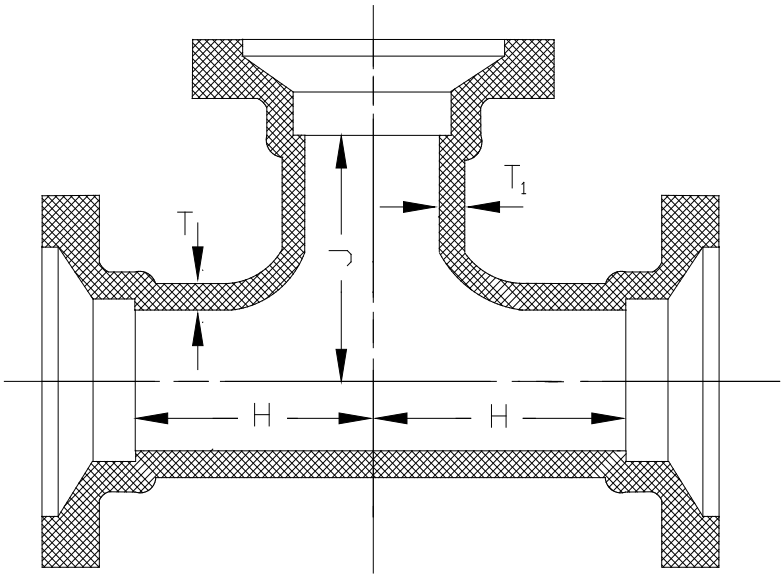

MECHANICAL JOINTS 1/4 BENDS

(90 DEGREES)

SIZE in.	WEIGHT lbs.	"A" in.	"T" in.	MATERIAL	RATING psi.	SOURCE
3	20	3.50	0.33	DI	350	C153
4	26	4.00	0.34	DI	350	C153
6	43	5.00	0.36	DI	350	C153
8	64	6.50	0.38	DI	350	C153
10	96	7.50	0.40	DI	350	C153
12	122	9.00	0.42	DI	350	C153
14	220	11.50	0.47	DI	350	C153
16	264	12.50	0.50	DI	350	C153
18	410	14.50	0.54	DI	350	C153
20	525	15.00	0.57	DI	350	C153
24	664	17.00	0.61	DI	350	C153
30	1,690	25.00	1.03	DI	250	C110
36	2,475	28.00	1.15	DI	250	C110
42	3,410	31.00	1.28	DI	250	C110
48	4,595	34.00	1.42	DI	250	C110

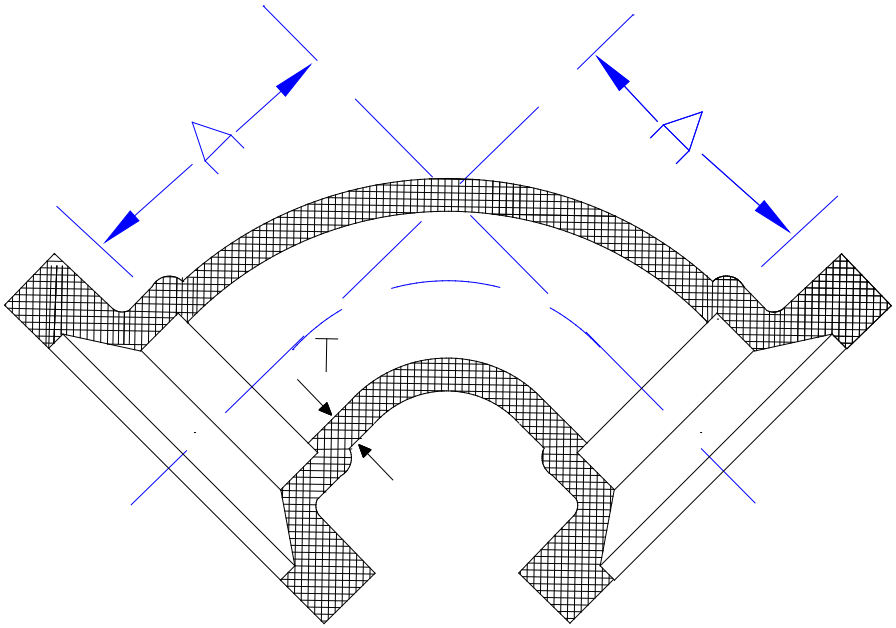

90 ° Bends

MECHANICAL JOINT 1/8 BENDS

(45 DEGREES)

SIZE in.	WEIGHT lbs.	"A" in.	"T" in.	MATERIAL	RATING psi	SOURCE
3	21	1.50	0.33	DI	350	C153
4	36	2.00	0.34	DI	350	C153
6	32	3.00	0.36	DI	350	C153
8	50	3.50	0.38	DI	350	C153
10	74	4.50	0.40	DI	350	C153
12	101	5.50	0.42	DI	350	C153
14	164	5.50	0.47	DI	350	C153
16	202	5.50	0.50	DI	350	C153
18	289	6.00	0.54	DI	350	C153
20	348	7.00	0.57	DI	350	C153
24	475	7.50	0.61	DI	350	C153
30	1,380	15.00	1.03	DI	250	C110
36	2,095	18.00	1.15	DI	250	C110
42	2,955	21.00	1.28	DI	250	C110
48	4,080	24.00	1.42	DI	250	C110

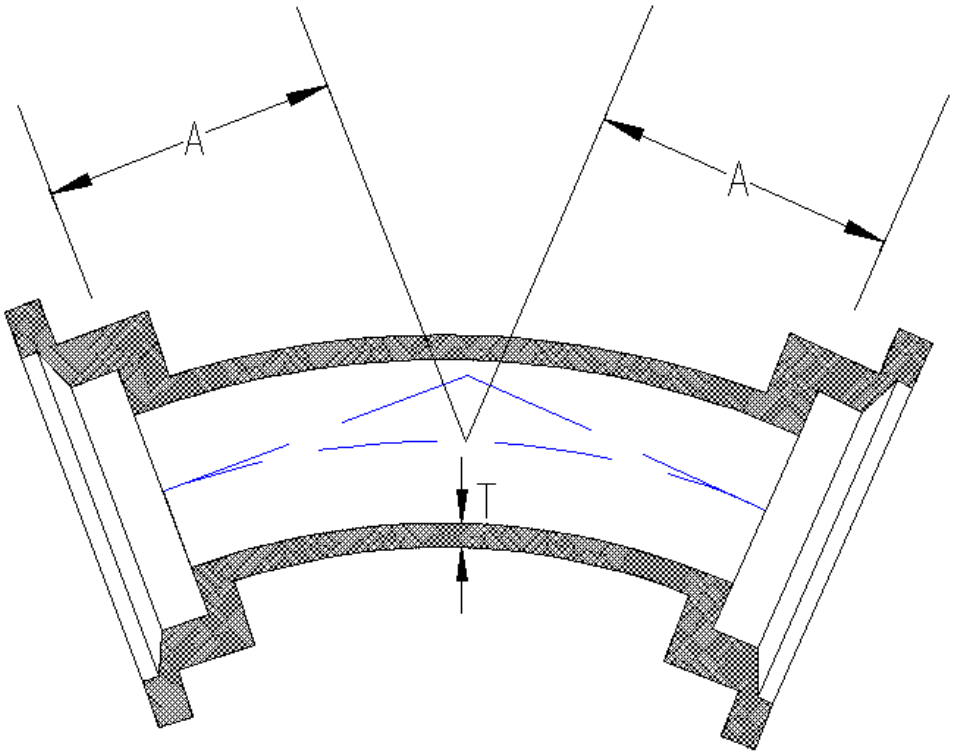

45° BENDS

MECHANICAL JOINT 1/16 BENDS

(22 1/2 DEGREES)

SIZE in.	WEIGHT lbs.	"A" in.	"T" in.	MATERIAL	RATING psi	SOURCE
3	16	1.00	0.33	DI	350	C153
4	21	1.50	0.34	DI	350	C153
6	34	2.00	0.36	DI	350	C153
8	46	2.50	0.38	DI	350	C153
10	67	3.00	0.40	DI	350	C153
12	84	3.50	0.42	DI	350	C153
14	148	3.75	0.47	DI	350	C153
16	178	4.00	0.50	DI	350	C153
18	292	4.50	0.54	DI	350	C153
20	364	4.50	0.57	DI	350	C153
24	384	4.50	0.61	DI	350	C153
30	1,400	15.00	1.03	DI	250	C110
36	2,135	18.00	1.15	DI	250	C110
42	3,020	21.00	1.28	DI	250	C110
48	4,170	24.00	1.42	DI	250	C110

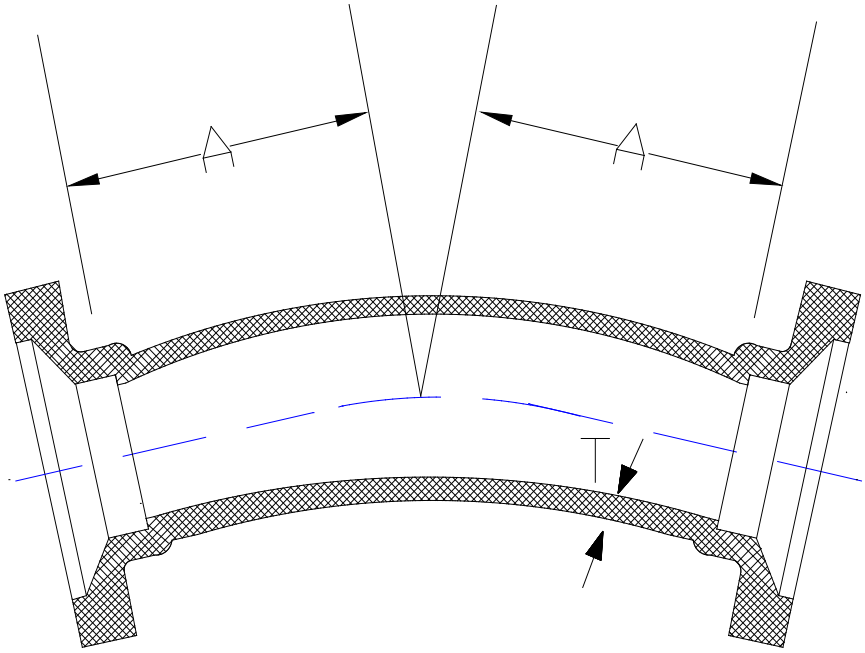

22 1/2° BENDS

MECHANICAL JOINT 1/32 BENDS

(11 1/4 DEGREES)

SIZE in.	WEIGHT lbs.	"A" in.	"T" in.	MATERIAL	RATING psi	SOURCE
3	14	1.00	0.33	DI	350	C153
4	16	1.25	0.34	DI	350	C153
6	30	1.50	0.36	DI	350	C153
8	42	1.75	0.38	DI	350	C153
10	58	2.00	0.40	DI	350	C153
12	74	2.25	0.42	DI	350	C153
14	93	2.50	0.47	DI	350	C153
16	148	2.50	0.50	DI	350	C153
18	205	3.00	0.54	DI	350	C153
20	245	3.00	0.57	DI	350	C153
24	315	3.00	0.61	DI	350	C153
30	1,410	15.00	1.03	DI	250	C110
36	2,145	18.00	1.15	DI	250	C110
42	3,035	21.00	1.28	DI	250	C110
48	4,190	24.00	1.42	DI	250	C110

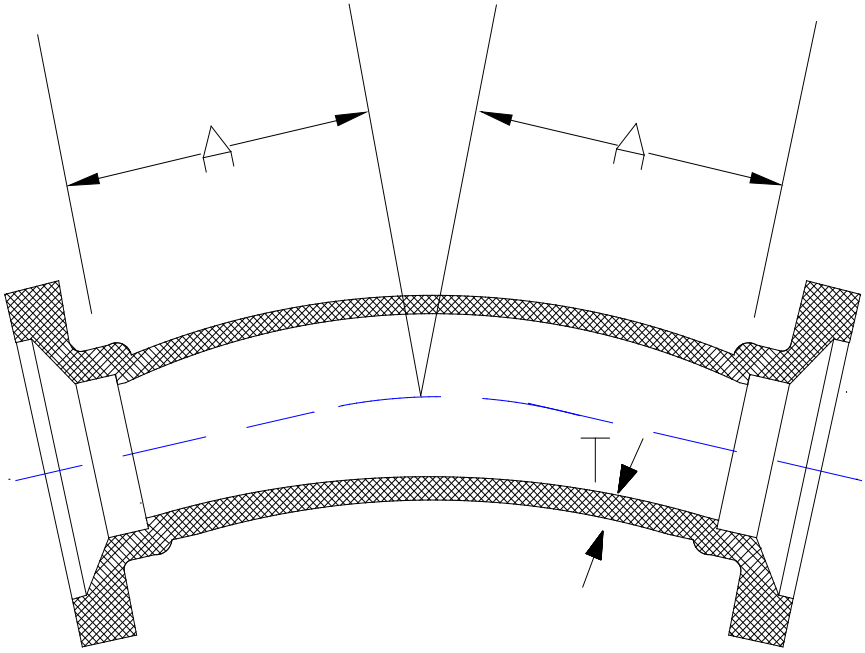

11 1/4° BENDS

MECHANICAL JOINT OFFSETS

SIZE in.	"D" in.	WEIGHT lbs.	"L" in.	"T" in.	MATERIAL	RATING psi	SOURCE
3	6	50	19	0.48	DI	250	C110
3	12	60	22	0.48	DI	250	C110
3	18	75	30	0.48	DI	250	C110
4	6	75	19	0.52	DI	250	C110
4	12	85	22	0.52	DI	250	C110
4	18	105	30	0.52	DI	250	C110
6	6	110	20	0.55	DI	250	C110
6	12	148	26	0.55	DI	250	C110
6	18	165	33	0.55	DI	250	C110
8	6	177	21	0.60	DI	250	C110
8	12	231	28	0.60	DI	250	C110
8	18	287	35	0.60	DI	250	C110
10	6	220	22	0.68	DI	250	C110
10	12	280	30	0.68	DI	250	C110
10	18	340	38	0.68	DI	250	C110
12	6	320	26	0.75	DI	250	C110
12	12	420	37	0.75	DI	250	C110
12	18	520	48	0.75	DI	250	C110
14	6	365	27	0.66	DI	350	C110
14	12	465	38	0.66	DI	350	C110
14	18	570	49	0.66	DI	350	C110
16	6	440	27	0.70	DI	350	C110
16	12	715	40	0.70	DI	350	C110
16	18	850	50	0.70	DI	350	C110

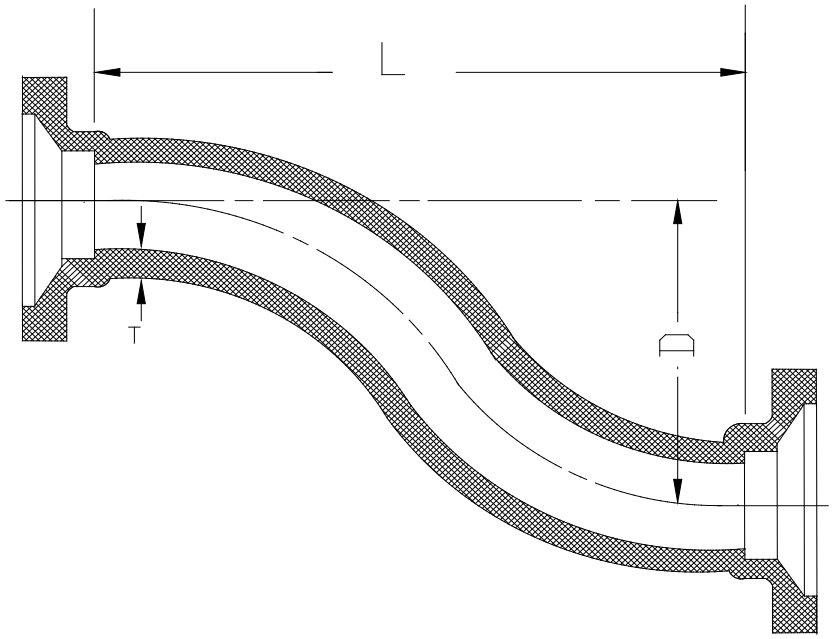

MECHANICAL JOINT REDUCERS

FROM in.	TO in.	WEIGHT lbs.	"L" in.	"T" in.	"Tl" in.	MATERIAL	RATING psi	SOURCE
4	3	18	3	0.34	0.33	DI	350	C153
6	3	28	5	0.36	0.33	DI	350	C153
6	4	28	4	0.36	0.34	DI	350	C153
8	4	36	5	0.38	0.34	DI	350	C153
8	6	39	4	0.38	0.36	DI	350	C153
10	4	53	7	0.40	0.34	DI	350	C153
10	6	59	5	0.40	0.36	DI	350	C153
10	8	54	4	0.40	0.38	DI	350	C153
12	4	67	9	0.42	0.34	DI	350	C153
12	6	64	7	0.42	0.36	DI	350	C153
12	8	60	5	0.42	0.38	DI	350	C153
12	10	63	4	0.42	0.40	DI	350	C153
14	6	104	9	0.47	0.36	DI	350	C153
14	8	104	7	0.47	0.38	DI	350	C153
14	10	100	5	0.47	0.40	DI	350	C153
14	12	100	4	0.47	0.42	DI	350	C153
16	6	132	11	0.50	0.36	DI	350	C153
16	8	136	9	0.50	0.38	DI	350	C153
16	10	128	7	0.50	0.40	DI	350	C153
16	12	120	5	0.50	0.42	DI	350	C153
16	14	140	4	0.50	0.47	DI	350	C153
18	8	201	12	0.54	0.38	DI	350	C153
18	10	196	10	0.54	0.40	DI	350	C153

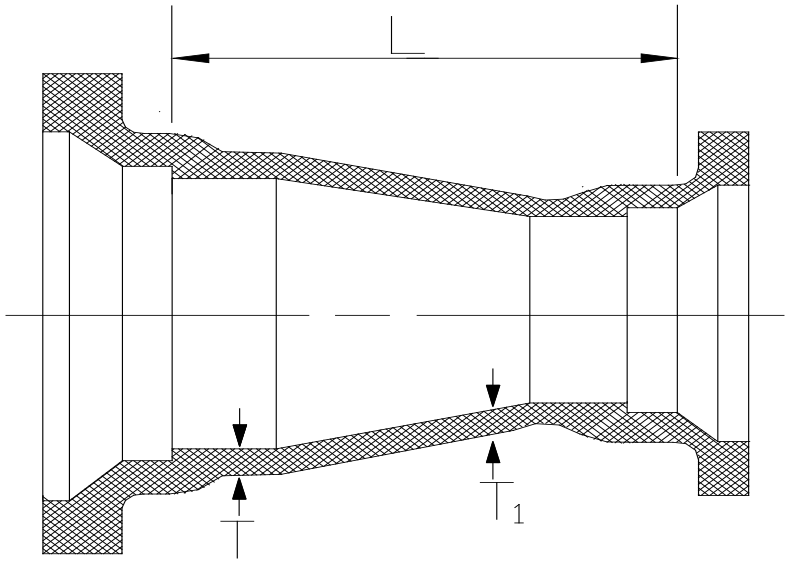

MECHANICAL JOINT REDUCERS

(CONTINUED)

FROM in.	TO in.	WEIGHT Lbs.	"L" in.	"T" in.	"Tl" in.	MATERIAL	RATING psi	SOURCE
18	12	175	10	0.75	0.42	DI	350	C153
18	14	180	8	0.75	0.47	DI	350	C153
18	16	194	7	0.75	0.50	DI	350	C153
20	10	225	14	0.80	0.40	DI	350	C153
20	12	214	12	0.80	0.42	DI	350	C153
20	14	208	10	0.80	0.47	DI	350	C153
20	16	225	8	0.80	0.50	DI	350	C153
20	18	233	8	0.80	0.54	DI	350	C153
24	12	320	16	0.89	0.42	DI	350	C153
24	14	314	14	0.89	0.47	DI	350	C153
24	16	325	12	0.89	0.50	DI	350	C153
24	18	325	10	0.89	0.54	DI	350	C153
24	20	315	7	0.89	0.57	DI	350	C153
30	18	970	30	1.03	1.03	DI	250	C110
30	20	1,225	30	1.03	1.03	DI	250	C110
30	24	1,360	30	1.03	1.03	DI	250	C110
36	20	1,495	36	1.15	1.15	DI	250	C110
36	24	1,580	36	1.15	1.15	DI	250	C110
36	30	1,919	36	1.15	1.15	DI	250	C110
42	20	1,980	42	1.28	1.28	DI	250	C110
42	24	2,060	42	1.28	1.28	DI	250	C110
42	30	2,370	42	1.28	1.28	DI	250	C110
42	36	2,695	42	1.28	1.28	DI	250	C110

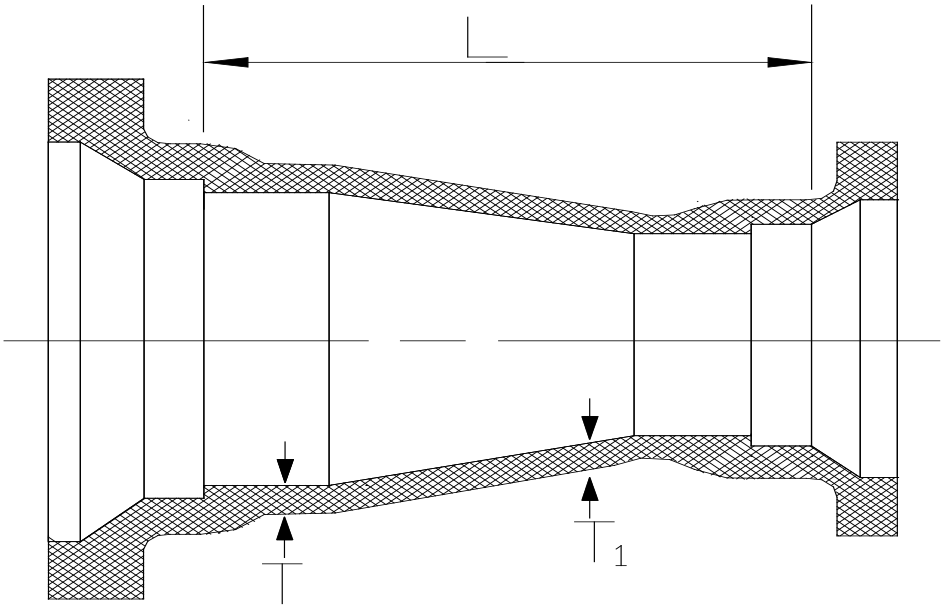

MECHANICAL JOINT REDUCERS

(CONTINUED)

FROM in.	TO in.	WEIGHT lbs.	"L" in.	"T" in.	"Tl" in.	MATERIAL	RATING psi	SOURCE
48	30	3,005	48	1.42	1.03	DI	250	C110
48	36	3,370	48	1.42	1.15	DI	250	C110
48	42	3,750	48	1.42	1.28	DI	250	C110

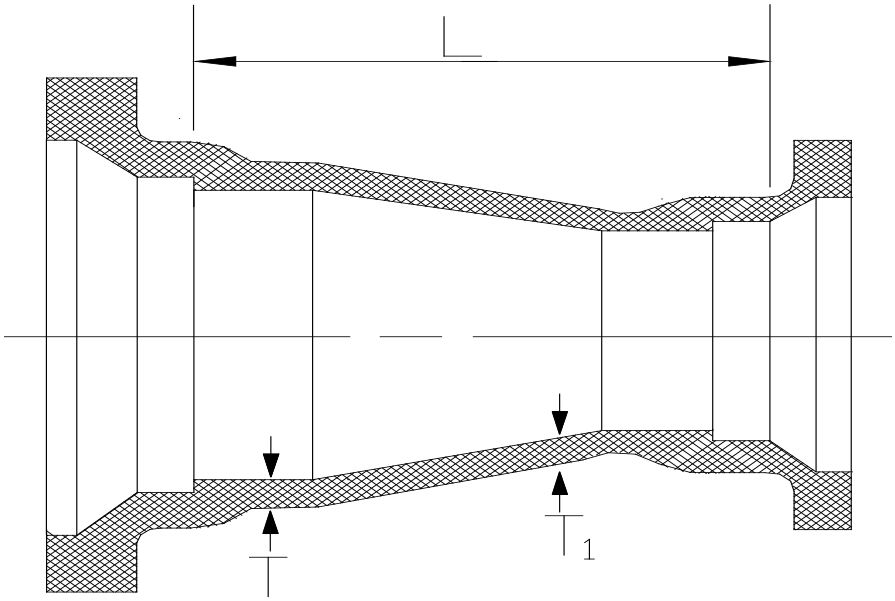

MECHANICAL JOINT LONG SLEEVES

SIZE in.	WEIGHT lbs.	"L" in.	"T" in.	MATERIAL	RATING psi	SOURCE
3	19	12.0	0.34	DI	350	C153
4	25	12.0	0.35	DI	350	C153
6	36	12.0	0.37	DI	350	C153
8	52	12.0	0.39	DI	350	C153
10	64	12.0	0.41	DI	350	C153
12	82	12.0	0.43	DI	350	C153
14	141	15.0	0.56	DI	350	C153
16	170	15.0	0.57	DI	350	C153
18	200	15.0	0.68	DI	350	C153
20	269	15.0	0.69	DI	350	C153
24	368	15.0	0.75	DI	350	C153
30	1,085	24.0	1.37	DI	250	C110
36	1,495	24.0	1.58	DI	250	C110
42	1,940	24.0	1.78	DI	250	C110
48	2,405	24.0	1.96	DI	250	C110

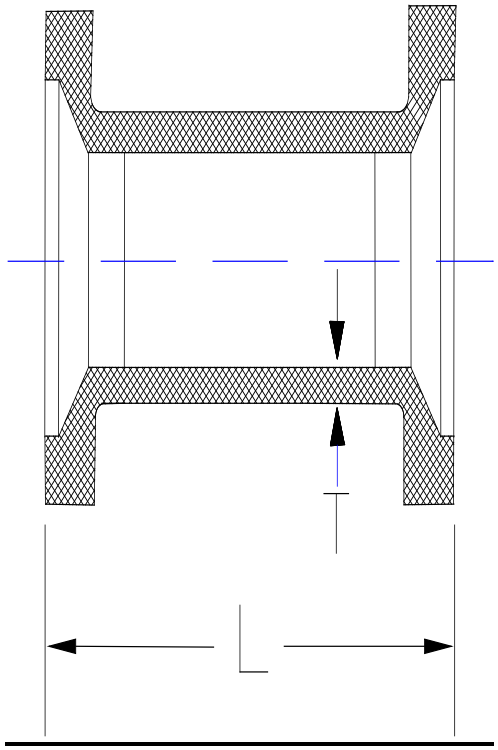

MECHANICAL JOINT SHORT SLEEVES

SIZE in.	WEIGHT lbs.	"L" in.	"T" in.	MATERIAL	RATING psi	SOURCE
3	16	7.5	0.33	DI	350	C153
4	18	7.5	0.34	DI	350	C153
6	28	7.5	0.36	DI	350	C153
8	38	7.5	0.38	DI	350	C153
10	52	7.5	0.40	DI	350	C153
12	66	7.5	0.42	DI	350	C153
14	111	9.5	0.47	DI	350	C153
16	130	9.5	0.50	DI	350	C153
18	160	9.5	0.54	DI	350	C153
20	212	9.5	0.57	DI	350	C153
24	272	9.5	0.61	DI	350	C153
30	745	15.0	1.37	DI	350	C110
36	1,030	15.0	1.58	DI	350	C110
42	1,330	15.0	1.78	DI	350	C110
48	1,645	15.0	1.96	DI	350	C110

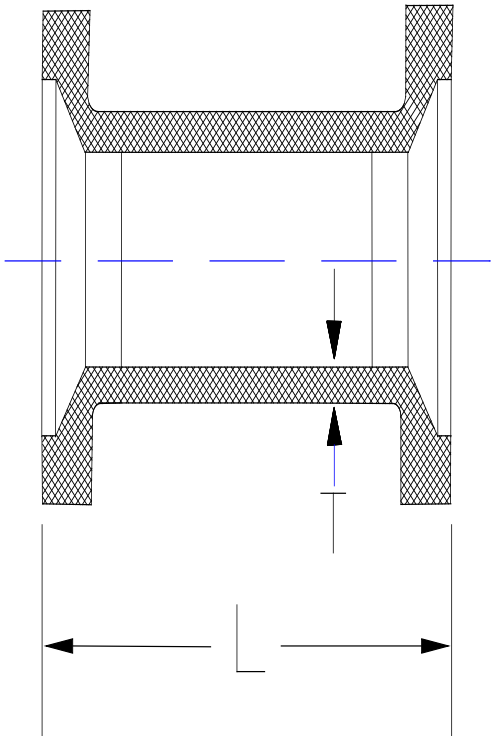

MECHANICAL JOINT CAPS AND PLUGS

SIZE in.	CAP lbs.	PLUG lbs.	"T" in.	MATERIA	RATIN psi	SOURCE
3	12	10	0.50	25	350	C110
4	15	15	0.60	25	350	C110
6	25	25	0.65	25	350	C110
8	45	45	0.70	25	350	C110
10	60	65	0.75	25	350	C110
12	80	85	0.75	25	350	C110
14	120	115	0.82	DI	250	C110
16	155	145	0.89	DI	250	C110
18	195	185	0.96	DI	250	C110
20	240	225	1.03	DI	250	C110
24	345	335	1.16	DI	250	C110
30	590	575	1.03	DI	250	C110
36	850	815	1.15	DI	250	C110
42	1,180	1,100	1.28	DI	250	C110
48	1,595	1,455	1.42	DI	250	C110

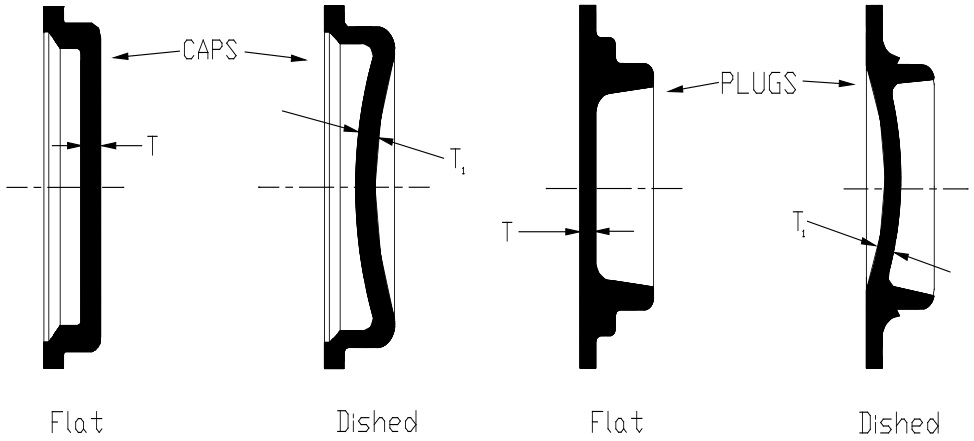

FLOWS & VELOCITIES

Appendix

VIII

{78}

a – Velocities & Flow Capacities for Pipe Sewers

- 10” VC Pipe
- 12” VC Pipe
- 15” VC Pipe
- 18” RC Pipe
- 21” RC Pipe
- 24” RC Pipe
- 27” RC Pipe
- 30” RC Pipe
- 36” RC Pipe
- 42” RC Pipe
- 48” RC Pipe
- 54” RC Pipe
- 60” RC Pipe
- 66” RC Pipe
- 72” RC Pipe
- 78” RC Pipe
- 84” RC Pipe
- 90” RC Pipe
- 96” RC Pipe
- 102” RC Pipe
- 108” RC Pipe
- 114” RC Pipe
- 120” RC Pipe

Velocity and Capacity for 10" VC Pipe

N= 0.013 A= 0.545 HR= 0.208

GRA %	VEL. FT/SEC	CAPACITY (CFS)	(MGD)	(GPM)	GRA %	VEL. FT/SEC	CAPACITY (CFS)	(MGD)	(GPM)
0.1%	1.274	0.695	0.449	312	5.1%	9.096	4.961	3.206	2,227
0.2%	1.801	0.982	0.635	441	5.2%	9.185	5.010	3.238	2,248
0.3%	2.206	1.203	0.778	540	5.3%	9.273	5.058	3.269	2,270
0.4%	2.547	1.389	0.898	624	5.4%	9.360	5.105	3.299	2,291
0.5%	2.848	1.553	1.004	697	5.5%	9.446	5.152	3.330	2,312
0.6%	3.120	1.702	1.100	764	5.6%	9.532	5.199	3.360	2,333
0.7%	3.370	1.838	1.188	825	5.7%	9.617	5.245	3.390	2,354
0.8%	3.603	1.965	1.270	882	5.8%	9.701	5.291	3.419	2,375
0.9%	3.821	2.084	1.347	935	5.9%	9.784	5.336	3.449	2,395
1.0%	4.028	2.197	1.420	986	6.0%	9.866	5.381	3.478	2,415
1.1%	4.225	2.304	1.489	1,034	6.1%	9.948	5.426	3.507	2,435
1.2%	4.412	2.407	1.555	1,080	6.2%	10.029	5.470	3.535	2,455
1.3%	4.593	2.505	1.619	1,124	6.3%	10.110	5.514	3.564	2,475
1.4%	4.766	2.599	1.680	1,167	6.4%	10.190	5.558	3.592	2,494
1.5%	4.933	2.691	1.739	1,208	6.5%	10.269	5.601	3.620	2,514
1.6%	5.095	2.779	1.796	1,247	6.6%	10.348	5.644	3.648	2,533
1.7%	5.252	2.864	1.851	1,286	6.7%	10.426	5.687	3.675	2,552
1.8%	5.404	2.947	1.905	1,323	6.8%	10.504	5.729	3.702	2,571
1.9%	5.552	3.028	1.957	1,359	6.9%	10.581	5.771	3.729	2,590
2.0%	5.696	3.107	2.008	1,394	7.0%	10.657	5.812	3.756	2,609
2.1%	5.837	3.184	2.057	1,429	7.1%	10.733	5.854	3.783	2,627
2.2%	5.974	3.259	2.106	1,462	7.2%	10.808	5.895	3.810	2,646
2.3%	6.109	3.332	2.153	1,495	7.3%	10.883	5.936	3.836	2,664
2.4%	6.240	3.403	2.200	1,527	7.4%	10.957	5.976	3.862	2,682
2.5%	6.369	3.474	2.245	1,559	7.5%	11.031	6.016	3.888	2,700
2.6%	6.495	3.542	2.289	1,590	7.6%	11.104	6.056	3.914	2,718
2.7%	6.619	3.610	2.333	1,620	7.7%	11.177	6.096	3.940	2,736
2.8%	6.740	3.676	2.376	1,650	7.8%	11.249	6.136	3.965	2,754
2.9%	6.859	3.741	2.418	1,679	7.9%	11.321	6.175	3.991	2,771
3.0%	6.977	3.805	2.459	1,708	8.0%	11.393	6.214	4.016	2,789
3.1%	7.092	3.868	2.500	1,736	8.1%	11.464	6.252	4.041	2,806
3.2%	7.205	3.930	2.540	1,764	8.2%	11.534	6.291	4.066	2,823
3.3%	7.317	3.991	2.579	1,791	8.3%	11.604	6.329	4.090	2,841
3.4%	7.427	4.051	2.618	1,818	8.4%	11.674	6.367	4.115	2,858
3.5%	7.536	4.110	2.656	1,845	8.5%	11.743	6.405	4.139	2,875
3.6%	7.642	4.168	2.694	1,871	8.6%	11.812	6.443	4.164	2,891
3.7%	7.748	4.226	2.731	1,897	8.7%	11.881	6.480	4.188	2,908
3.8%	7.852	4.283	2.768	1,922	8.8%	11.949	6.517	4.212	2,925
3.9%	7.955	4.339	2.804	1,947	8.9%	12.016	6.554	4.236	2,941
4.0%	8.056	4.394	2.840	1,972	9.0%	12.084	6.591	4.259	2,958
4.1%	8.156	4.448	2.875	1,996	9.1%	12.151	6.627	4.283	2,974
4.2%	8.255	4.502	2.910	2,021	9.2%	12.217	6.664	4.306	2,991
4.3%	8.352	4.556	2.944	2,045	9.3%	12.284	6.700	4.330	3,007
4.4%	8.449	4.608	2.978	2,068	9.4%	12.349	6.736	4.353	3,023
4.5%	8.545	4.660	3.012	2,092	9.5%	12.415	6.771	4.376	3,039
4.6%	8.639	4.712	3.045	2,115	9.6%	12.480	6.807	4.399	3,055
4.7%	8.732	4.763	3.078	2,138	9.7%	12.545	6.842	4.422	3,071
4.8%	8.825	4.813	3.111	2,160	9.8%	12.609	6.877	4.445	3,087
4.9%	8.916	4.863	3.143	2,183	9.9%	12.674	6.912	4.467	3,102
5.0%	9.007	4.912	3.175	2,205	10.0%	12.737	6.947	4.490	3,118

Velocity and Capacity for 12" VC Pipe

N= 0.013 A= 0.785 HR= 0.250

GRA %	VEL. FT/SEC	CAPACITY (CFS)	(MGD)	(GPM)	GRA %	VEL. FT/SEC	CAPACITY (CFS)	(MGD)	(GPM)
0.1%	1.438	1.130	0.730	507	5.1%	10.272	8.068	5.214	3,621
0.2%	2.034	1.598	1.032	717	5.2%	10.372	8.146	5.265	3,656
0.3%	2.491	1.957	1.265	878	5.3%	10.471	8.224	5.315	3,691
0.4%	2.877	2.259	1.460	1,014	5.4%	10.570	8.301	5.365	3,726
0.5%	3.216	2.526	1.633	1,134	5.5%	10.667	8.378	5.414	3,760
0.6%	3.523	2.767	1.788	1,242	5.6%	10.764	8.454	5.463	3,794
0.7%	3.806	2.989	1.932	1,341	5.7%	10.859	8.529	5.512	3,828
0.8%	4.068	3.195	2.065	1,434	5.8%	10.954	8.603	5.560	3,861
0.9%	4.315	3.389	2.190	1,521	5.9%	11.048	8.677	5.608	3,894
1.0%	4.549	3.572	2.309	1,603	6.0%	11.142	8.751	5.655	3,927
1.1%	4.771	3.747	2.421	1,682	6.1%	11.234	8.823	5.702	3,960
1.2%	4.983	3.913	2.529	1,756	6.2%	11.326	8.895	5.749	3,992
1.3%	5.186	4.073	2.632	1,828	6.3%	11.417	8.967	5.795	4,024
1.4%	5.382	4.227	2.732	1,897	6.4%	11.507	9.038	5.841	4,056
1.5%	5.571	4.375	2.828	1,964	6.5%	11.596	9.108	5.886	4,088
1.6%	5.753	4.519	2.920	2,028	6.6%	11.685	9.178	5.931	4,119
1.7%	5.931	4.658	3.010	2,090	6.7%	11.774	9.247	5.976	4,150
1.8%	6.102	4.793	3.097	2,151	6.8%	11.861	9.316	6.020	4,181
1.9%	6.270	4.924	3.182	2,210	6.9%	11.948	9.384	6.065	4,212
2.0%	6.433	5.052	3.265	2,267	7.0%	12.034	9.452	6.108	4,242
2.1%	6.591	5.177	3.346	2,323	7.1%	12.120	9.519	6.152	4,272
2.2%	6.747	5.299	3.424	2,378	7.2%	12.205	9.586	6.195	4,302
2.3%	6.898	5.418	3.501	2,432	7.3%	12.289	9.652	6.238	4,332
2.4%	7.047	5.534	3.577	2,484	7.4%	12.373	9.718	6.280	4,361
2.5%	7.192	5.648	3.650	2,535	7.5%	12.457	9.783	6.323	4,391
2.6%	7.334	5.760	3.723	2,585	7.6%	12.539	9.848	6.365	4,420
2.7%	7.474	5.870	3.794	2,634	7.7%	12.622	9.913	6.406	4,449
2.8%	7.611	5.978	3.863	2,683	7.8%	12.703	9.977	6.448	4,478
2.9%	7.746	6.084	3.932	2,730	7.9%	12.784	10.041	6.489	4,506
3.0%	7.878	6.188	3.999	2,777	8.0%	12.865	10.104	6.530	4,535
3.1%	8.008	6.290	4.065	2,823	8.1%	12.945	10.167	6.571	4,563
3.2%	8.137	6.390	4.130	2,868	8.2%	13.025	10.230	6.611	4,591
3.3%	8.263	6.490	4.194	2,913	8.3%	13.104	10.292	6.651	4,619
3.4%	8.387	6.587	4.257	2,956	8.4%	13.183	10.354	6.691	4,647
3.5%	8.509	6.683	4.319	2,999	8.5%	13.261	10.415	6.731	4,674
3.6%	8.630	6.778	4.381	3,042	8.6%	13.339	10.476	6.771	4,702
3.7%	8.749	6.872	4.441	3,084	8.7%	13.416	10.537	6.810	4,729
3.8%	8.867	6.964	4.501	3,125	8.8%	13.493	10.597	6.849	4,756
3.9%	8.983	7.055	4.559	3,166	8.9%	13.570	10.657	6.888	4,783
4.0%	9.097	7.145	4.617	3,207	9.0%	13.646	10.717	6.926	4,810
4.1%	9.210	7.234	4.675	3,246	9.1%	13.721	10.777	6.965	4,837
4.2%	9.322	7.321	4.732	3,286	9.2%	13.796	10.836	7.003	4,863
4.3%	9.432	7.408	4.788	3,325	9.3%	13.871	10.894	7.041	4,889
4.4%	9.541	7.494	4.843	3,363	9.4%	13.945	10.953	7.078	4,916
4.5%	9.649	7.578	4.898	3,401	9.5%	14.019	11.011	7.116	4,942
4.6%	9.755	7.662	4.952	3,439	9.6%	14.093	11.069	7.153	4,968
4.7%	9.861	7.745	5.005	3,476	9.7%	14.166	11.126	7.191	4,993
4.8%	9.965	7.827	5.058	3,513	9.8%	14.239	11.183	7.227	5,019
4.9%	10.069	7.908	5.111	3,549	9.9%	14.312	11.240	7.264	5,045
5.0%	10.171	7.988	5.162	3,585	10.0%	14.384	11.297	7.301	5,070

Velocity and Capacity for 15" VC Pipe

N= 0.013 | A= 1.227 | HR= 0.313

GRA %	VEL. FT/SEC	CAPACITY (CFS)	(MGD)	(GPM)	GRA %	VEL. FT/SEC	CAPACITY (CFS)	(MGD)	(GPM)
0.1%	1.669	2.048	1.324	919	5.1%	11.920	14.628	9.453	6,565
0.2%	2.360	2.897	1.872	1,300	5.2%	12.036	14.770	9.546	6,629
0.3%	2.891	3.548	2.293	1,592	5.3%	12.151	14.912	9.637	6,692
0.4%	3.338	4.097	2.647	1,839	5.4%	12.265	15.052	9.727	6,755
0.5%	3.732	4.580	2.960	2,056	5.5%	12.378	15.190	9.817	6,817
0.6%	4.088	5.017	3.242	2,252	5.6%	12.490	15.328	9.906	6,879
0.7%	4.416	5.419	3.502	2,432	5.7%	12.601	15.464	9.994	6,940
0.8%	4.721	5.793	3.744	2,600	5.8%	12.711	15.599	10.081	7,001
0.9%	5.007	6.145	3.971	2,758	5.9%	12.820	15.733	10.168	7,061
1.0%	5.278	6.477	4.186	2,907	6.0%	12.929	15.866	10.254	7,121
1.1%	5.536	6.793	4.390	3,049	6.1%	13.036	15.997	10.339	7,180
1.2%	5.782	7.095	4.586	3,184	6.2%	13.142	16.128	10.423	7,238
1.3%	6.018	7.385	4.773	3,314	6.3%	13.248	16.258	10.507	7,296
1.4%	6.245	7.664	4.953	3,440	6.4%	13.353	16.386	10.590	7,354
1.5%	6.464	7.933	5.127	3,560	6.5%	13.457	16.514	10.672	7,411
1.6%	6.676	8.193	5.295	3,677	6.6%	13.560	16.640	10.754	7,468
1.7%	6.882	8.445	5.458	3,790	6.7%	13.662	16.766	10.835	7,524
1.8%	7.081	8.690	5.616	3,900	6.8%	13.764	16.890	10.916	7,580
1.9%	7.275	8.928	5.770	4,007	6.9%	13.864	17.014	10.996	7,636
2.0%	7.464	9.160	5.920	4,111	7.0%	13.964	17.137	11.075	7,691
2.1%	7.649	9.386	6.066	4,213	7.1%	14.064	17.259	11.154	7,746
2.2%	7.829	9.607	6.209	4,312	7.2%	14.163	17.380	11.232	7,800
2.3%	8.005	9.823	6.348	4,409	7.3%	14.261	17.500	11.310	7,854
2.4%	8.177	10.034	6.485	4,503	7.4%	14.358	17.620	11.387	7,908
2.5%	8.345	10.241	6.619	4,596	7.5%	14.455	17.738	11.464	7,961
2.6%	8.511	10.444	6.750	4,687	7.6%	14.551	17.856	11.540	8,014
2.7%	8.673	10.643	6.878	4,777	7.7%	14.646	17.973	11.616	8,066
2.8%	8.832	10.838	7.005	4,864	7.8%	14.741	18.090	11.691	8,119
2.9%	8.988	11.030	7.129	4,950	7.9%	14.835	18.205	11.766	8,171
3.0%	9.142	11.219	7.250	5,035	8.0%	14.929	18.320	11.840	8,222
3.1%	9.293	11.404	7.370	5,118	8.1%	15.022	18.434	11.914	8,273
3.2%	9.442	11.587	7.488	5,200	8.2%	15.114	18.548	11.987	8,324
3.3%	9.588	11.766	7.604	5,281	8.3%	15.206	18.661	12.060	8,375
3.4%	9.732	11.943	7.719	5,360	8.4%	15.297	18.773	12.132	8,425
3.5%	9.874	12.118	7.831	5,438	8.5%	15.388	18.884	12.204	8,475
3.6%	10.014	12.290	7.942	5,516	8.6%	15.478	18.995	12.276	8,525
3.7%	10.153	12.459	8.052	5,592	8.7%	15.568	19.105	12.347	8,574
3.8%	10.289	12.626	8.160	5,667	8.8%	15.657	19.214	12.418	8,623
3.9%	10.423	12.791	8.267	5,741	8.9%	15.746	19.323	12.488	8,672
4.0%	10.556	12.954	8.372	5,814	9.0%	15.834	19.432	12.558	8,721
4.1%	10.687	13.115	8.476	5,886	9.1%	15.922	19.539	12.628	8,769
4.2%	10.817	13.274	8.579	5,957	9.2%	16.009	19.646	12.697	8,817
4.3%	10.945	13.431	8.680	6,028	9.3%	16.096	19.753	12.766	8,865
4.4%	11.071	13.587	8.781	6,098	9.4%	16.182	19.859	12.834	8,913
4.5%	11.197	13.740	8.880	6,167	9.5%	16.268	19.964	12.902	8,960
4.6%	11.320	13.892	8.978	6,235	9.6%	16.354	20.069	12.970	9,007
4.7%	11.443	14.042	9.075	6,302	9.7%	16.438	20.173	13.037	9,054
4.8%	11.564	14.191	9.171	6,369	9.8%	16.523	20.277	13.104	9,100
4.9%	11.684	14.338	9.266	6,435	9.9%	16.607	20.380	13.171	9,147
5.0%	11.802	14.483	9.360	6,500	10.0%	16.691	20.483	13.237	9,193

Velocity and Capacity for 18" RC Pipe

N= 0.015 | A= 1.767 | HR= 0.375

GRA %	VEL. FT/SEC	CAPACITY (CFS)	(MGD)	(GPM)	GRA %	VEL. FT/SEC	CAPACITY (CFS)	(MGD)	(GPM)
0.1%	1.633	2.887	1.866	1,296	5.1%	11.665	20.615	13.323	9,252
0.2%	2.310	4.082	2.638	1,832	5.2%	11.779	20.816	13.453	9,342
0.3%	2.829	5.000	3.231	2,244	5.3%	11.892	21.015	13.581	9,431
0.4%	3.267	5.773	3.731	2,591	5.4%	12.004	21.212	13.709	9,520
0.5%	3.653	6.455	4.171	2,897	5.5%	12.114	21.408	13.835	9,608
0.6%	4.001	7.071	4.570	3,173	5.6%	12.224	21.601	13.960	9,695
0.7%	4.322	7.637	4.936	3,428	5.7%	12.333	21.793	14.084	9,781
0.8%	4.620	8.165	5.277	3,664	5.8%	12.440	21.984	14.207	9,866
0.9%	4.900	8.660	5.597	3,887	5.9%	12.547	22.172	14.329	9,951
1.0%	5.166	9.128	5.899	4,097	6.0%	12.653	22.360	14.450	10,035
1.1%	5.418	9.574	6.187	4,297	6.1%	12.758	22.545	14.570	10,118
1.2%	5.659	10.000	6.462	4,488	6.2%	12.862	22.729	14.689	10,201
1.3%	5.890	10.408	6.726	4,671	6.3%	12.965	22.912	14.807	10,283
1.4%	6.112	10.801	6.980	4,847	6.4%	13.068	23.093	14.924	10,364
1.5%	6.326	11.180	7.225	5,017	6.5%	13.170	23.273	15.040	10,445
1.6%	6.534	11.546	7.462	5,182	6.6%	13.271	23.451	15.156	10,525
1.7%	6.735	11.902	7.692	5,342	6.7%	13.371	23.628	15.270	10,604
1.8%	6.930	12.247	7.915	5,496	6.8%	13.470	23.804	15.384	10,683
1.9%	7.120	12.582	8.132	5,647	6.9%	13.569	23.978	15.496	10,761
2.0%	7.305	12.909	8.343	5,794	7.0%	13.667	24.151	15.608	10,839
2.1%	7.486	13.228	8.549	5,937	7.1%	13.764	24.323	15.719	10,916
2.2%	7.662	13.539	8.750	6,076	7.2%	13.861	24.494	15.830	10,993
2.3%	7.834	13.844	8.947	6,213	7.3%	13.957	24.663	15.939	11,069
2.4%	8.002	14.141	9.139	6,347	7.4%	14.052	24.832	16.048	11,144
2.5%	8.167	14.433	9.328	6,478	7.5%	14.146	24.999	16.156	11,219
2.6%	8.329	14.719	9.512	6,606	7.6%	14.240	25.165	16.263	11,294
2.7%	8.488	14.999	9.694	6,732	7.7%	14.334	25.330	16.370	11,368
2.8%	8.644	15.275	9.871	6,855	7.8%	14.427	25.494	16.476	11,442
2.9%	8.797	15.545	10.046	6,977	7.9%	14.519	25.657	16.581	11,515
3.0%	8.947	15.811	10.218	7,096	8.0%	14.610	25.819	16.686	11,587
3.1%	9.095	16.072	10.387	7,213	8.1%	14.701	25.979	16.790	11,660
3.2%	9.240	16.329	10.553	7,329	8.2%	14.792	26.139	16.893	11,731
3.3%	9.384	16.582	10.717	7,442	8.3%	14.882	26.298	16.996	11,803
3.4%	9.525	16.832	10.878	7,554	8.4%	14.971	26.456	17.098	11,874
3.5%	9.664	17.077	11.037	7,664	8.5%	15.060	26.613	17.199	11,944
3.6%	9.801	17.320	11.193	7,773	8.6%	15.148	26.769	17.300	12,014
3.7%	9.936	17.559	11.348	7,880	8.7%	15.236	26.925	17.401	12,084
3.8%	10.069	17.794	11.500	7,986	8.8%	15.323	27.079	17.500	12,153
3.9%	10.201	18.027	11.650	8,090	8.9%	15.410	27.232	17.599	12,222
4.0%	10.331	18.257	11.799	8,194	9.0%	15.497	27.385	17.698	12,290
4.1%	10.459	18.483	11.945	8,295	9.1%	15.582	27.537	17.796	12,358
4.2%	10.586	18.707	12.090	8,396	9.2%	15.668	27.687	17.894	12,426
4.3%	10.711	18.929	12.233	8,495	9.3%	15.753	27.837	17.991	12,493
4.4%	10.835	19.148	12.375	8,593	9.4%	15.837	27.987	18.087	12,560
4.5%	10.958	19.364	12.514	8,691	9.5%	15.921	28.135	18.183	12,627
4.6%	11.079	19.578	12.653	8,787	9.6%	16.005	28.283	18.278	12,693
4.7%	11.199	19.790	12.789	8,882	9.7%	16.088	28.430	18.373	12,759
4.8%	11.317	19.999	12.925	8,976	9.8%	16.171	28.576	18.468	12,825
4.9%	11.434	20.206	13.059	9,069	9.9%	16.253	28.721	18.562	12,890
5.0%	11.551	20.411	13.191	9,161	10.0%	16.335	28.866	18.655	12,955

Velocity and Capacity for 21" RC Pipe

N= 0.015 | A= 2.405 | HR= 0.438

GRA %	VEL. FT/SEC	CAPACITY (CFS)	(MGD)	(GPM)	GRA %	VEL. FT/SEC	CAPACITY (CFS)	(MGD)	(GPM)
0.1%	1.810	4.354	2.814	1,954	5.1%	12.928	31.096	20.096	13,956
0.2%	2.560	6.158	3.980	2,764	5.2%	13.054	31.399	20.292	14,092
0.3%	3.136	7.542	4.874	3,385	5.3%	13.179	31.699	20.486	14,227
0.4%	3.621	8.708	5.628	3,908	5.4%	13.303	31.997	20.679	14,360
0.5%	4.048	9.736	6.292	4,370	5.5%	13.425	32.292	20.869	14,493
0.6%	4.434	10.666	6.893	4,787	5.6%	13.547	32.584	21.058	14,624
0.7%	4.790	11.520	7.445	5,170	5.7%	13.667	32.874	21.245	14,754
0.8%	5.120	12.316	7.959	5,527	5.8%	13.787	33.161	21.431	14,883
0.9%	5.431	13.063	8.442	5,863	5.9%	13.905	33.446	21.615	15,010
1.0%	5.725	13.769	8.899	6,180	6.0%	14.022	33.728	21.797	15,137
1.1%	6.004	14.441	9.333	6,481	6.1%	14.139	34.008	21.978	15,263
1.2%	6.271	15.084	9.748	6,769	6.2%	14.254	34.285	22.158	15,387
1.3%	6.527	15.699	10.146	7,046	6.3%	14.369	34.561	22.336	15,511
1.4%	6.773	16.292	10.529	7,312	6.4%	14.482	34.834	22.512	15,633
1.5%	7.011	16.864	10.899	7,569	6.5%	14.595	35.105	22.687	15,755
1.6%	7.241	17.417	11.256	7,817	6.6%	14.707	35.374	22.861	15,876
1.7%	7.464	17.953	11.603	8,057	6.7%	14.818	35.641	23.034	15,996
1.8%	7.680	18.474	11.939	8,291	6.8%	14.928	35.906	23.205	16,115
1.9%	7.891	18.980	12.266	8,518	6.9%	15.037	36.169	23.375	16,233
2.0%	8.096	19.473	12.585	8,739	7.0%	15.146	36.430	23.544	16,350
2.1%	8.296	19.954	12.895	8,955	7.1%	15.254	36.690	23.711	16,466
2.2%	8.491	20.423	13.199	9,166	7.2%	15.361	36.947	23.878	16,582
2.3%	8.682	20.882	13.496	9,372	7.3%	15.467	37.203	24.043	16,697
2.4%	8.869	21.331	13.786	9,574	7.4%	15.573	37.457	24.207	16,811
2.5%	9.051	21.771	14.070	9,771	7.5%	15.678	37.709	24.370	16,924
2.6%	9.231	22.202	14.349	9,964	7.6%	15.782	37.959	24.532	17,036
2.7%	9.407	22.625	14.622	10,154	7.7%	15.885	38.208	24.693	17,148
2.8%	9.579	23.041	14.890	10,341	7.8%	15.988	38.456	24.853	17,259
2.9%	9.749	23.448	15.154	10,524	7.9%	16.090	38.701	25.012	17,369
3.0%	9.915	23.849	15.413	10,704	8.0%	16.192	38.946	25.169	17,479
3.1%	10.079	24.243	15.668	10,880	8.1%	16.293	39.188	25.326	17,588
3.2%	10.241	24.631	15.919	11,055	8.2%	16.393	39.429	25.482	17,696
3.3%	10.399	25.013	16.165	11,226	8.3%	16.492	39.669	25.637	17,803
3.4%	10.556	25.389	16.408	11,395	8.4%	16.592	39.907	25.791	17,910
3.5%	10.710	25.760	16.648	11,561	8.5%	16.690	40.144	25.944	18,017
3.6%	10.862	26.125	16.884	11,725	8.6%	16.788	40.380	26.096	18,122
3.7%	11.012	26.486	17.117	11,887	8.7%	16.885	40.614	26.248	18,227
3.8%	11.159	26.841	17.347	12,046	8.8%	16.982	40.846	26.398	18,332
3.9%	11.305	27.192	17.574	12,204	8.9%	17.078	41.078	26.547	18,436
4.0%	11.449	27.539	17.797	12,359	9.0%	17.174	41.308	26.696	18,539
4.1%	11.591	27.881	18.019	12,513	9.1%	17.269	41.537	26.844	18,642
4.2%	11.732	28.219	18.237	12,665	9.2%	17.364	41.764	26.991	18,744
4.3%	11.871	28.553	18.453	12,814	9.3%	17.458	41.991	27.138	18,845
4.4%	12.008	28.883	18.666	12,963	9.4%	17.551	42.216	27.283	18,947
4.5%	12.144	29.209	18.877	13,109	9.5%	17.644	42.440	27.428	19,047
4.6%	12.278	29.532	19.086	13,254	9.6%	17.737	42.663	27.572	19,147
4.7%	12.411	29.851	19.292	13,397	9.7%	17.829	42.884	27.715	19,246
4.8%	12.542	30.167	19.496	13,539	9.8%	17.921	43.105	27.857	19,345
4.9%	12.672	30.480	19.698	13,679	9.9%	18.012	43.324	27.999	19,444
5.0%	12.801	30.789	19.898	13,818	10.0%	18.103	43.542	28.140	19,542

Velocity and Capacity for 24" RC Pipe

N= 0.015 | A= 3.142 | HR= 0.500

GRA %	VEL. FT/SEC	CAPACITY (CFS)	(MGD)	(GPM)	GRA %	VEL. FT/SEC	CAPACITY (CFS)	(MGD)	(GPM)
0.1%	1.979	6.217	4.018	2,790	5.1%	14.132	44.396	28.692	19,925
0.2%	2.798	8.792	5.682	3,946	5.2%	14.270	44.829	28.972	20,119
0.3%	3.427	10.768	6.959	4,832	5.3%	14.406	45.258	29.249	20,312
0.4%	3.958	12.433	8.035	5,580	5.4%	14.541	45.683	29.524	20,503
0.5%	4.425	13.901	8.984	6,239	5.5%	14.675	46.104	29.796	20,692
0.6%	4.847	15.228	9.841	6,834	5.6%	14.808	46.521	30.065	20,879
0.7%	5.235	16.448	10.630	7,382	5.7%	14.940	46.935	30.333	21,064
0.8%	5.597	17.583	11.364	7,891	5.8%	15.070	47.345	30.598	21,248
0.9%	5.936	18.650	12.053	8,370	5.9%	15.200	47.751	30.860	21,431
1.0%	6.258	19.659	12.705	8,823	6.0%	15.328	48.154	31.121	21,612
1.1%	6.563	20.618	13.325	9,254	6.1%	15.455	48.554	31.379	21,791
1.2%	6.855	21.535	13.918	9,665	6.2%	15.581	48.950	31.635	21,969
1.3%	7.135	22.415	14.486	10,060	6.3%	15.706	49.343	31.889	22,145
1.4%	7.404	23.261	15.033	10,439	6.4%	15.831	49.733	32.141	22,320
1.5%	7.664	24.077	15.560	10,806	6.5%	15.954	50.120	32.391	22,494
1.6%	7.915	24.867	16.071	11,160	6.6%	16.076	50.505	32.640	22,666
1.7%	8.159	25.632	16.565	11,504	6.7%	16.197	50.886	32.886	22,837
1.8%	8.395	26.375	17.046	11,837	6.8%	16.318	51.264	33.131	23,007
1.9%	8.626	27.098	17.513	12,162	6.9%	16.437	51.640	33.373	23,176
2.0%	8.850	27.802	17.968	12,477	7.0%	16.556	52.012	33.614	23,343
2.1%	9.068	28.488	18.411	12,786	7.1%	16.674	52.383	33.853	23,509
2.2%	9.282	29.159	18.845	13,086	7.2%	16.791	52.750	34.091	23,674
2.3%	9.490	29.814	19.268	13,381	7.3%	16.907	53.115	34.327	23,838
2.4%	9.694	30.455	19.682	13,668	7.4%	17.023	53.478	34.561	24,001
2.5%	9.894	31.083	20.088	13,950	7.5%	17.137	53.838	34.794	24,162
2.6%	10.090	31.699	20.486	14,226	7.6%	17.251	54.196	35.025	24,323
2.7%	10.282	32.303	20.876	14,497	7.7%	17.364	54.551	35.255	24,483
2.8%	10.471	32.896	21.259	14,764	7.8%	17.477	54.904	35.483	24,641
2.9%	10.656	33.478	21.636	15,025	7.9%	17.588	55.255	35.710	24,798
3.0%	10.838	34.050	22.006	15,282	8.0%	17.699	55.604	35.935	24,955
3.1%	11.018	34.613	22.369	15,534	8.1%	17.809	55.950	36.159	25,110
3.2%	11.194	35.167	22.727	15,783	8.2%	17.919	56.294	36.381	25,265
3.3%	11.368	35.712	23.080	16,028	8.3%	18.028	56.637	36.603	25,419
3.4%	11.538	36.249	23.427	16,269	8.4%	18.136	56.977	36.822	25,571
3.5%	11.707	36.778	23.769	16,506	8.5%	18.244	57.315	37.041	25,723
3.6%	11.873	37.300	24.106	16,740	8.6%	18.351	57.651	37.258	25,874
3.7%	12.037	37.815	24.438	16,971	8.7%	18.457	57.985	37.474	26,024
3.8%	12.198	38.322	24.767	17,199	8.8%	18.563	58.318	37.689	26,173
3.9%	12.358	38.823	25.090	17,424	8.9%	18.668	58.648	37.903	26,321
4.0%	12.515	39.318	25.410	17,646	9.0%	18.773	58.977	38.115	26,469
4.1%	12.671	39.806	25.726	17,865	9.1%	18.877	59.303	38.326	26,615
4.2%	12.824	40.289	26.037	18,082	9.2%	18.980	59.628	38.536	26,761
4.3%	12.976	40.765	26.346	18,296	9.3%	19.083	59.951	38.745	26,906
4.4%	13.126	41.237	26.650	18,507	9.4%	19.185	60.273	38.953	27,050
4.5%	13.274	41.703	26.951	18,716	9.5%	19.287	60.593	39.159	27,194
4.6%	13.421	42.164	27.249	18,923	9.6%	19.388	60.911	39.365	27,337
4.7%	13.566	42.619	27.544	19,128	9.7%	19.489	61.227	39.569	27,479
4.8%	13.710	43.070	27.835	19,330	9.8%	19.589	61.542	39.773	27,620
4.9%	13.852	43.517	28.124	19,530	9.9%	19.689	61.855	39.975	27,761
5.0%	13.992	43.959	28.409	19,729	10.0%	19.788	62.167	40.177	27,900

Velocity and Capacity for 27" RC Pipe

N= 0.013 | A= 3.976 | HR= 0.563

GRA %	VEL. FT/SEC	CAPACITY (CFS)	(MGD)	(GPM)	GRA %	VEL. FT/SEC	CAPACITY (CFS)	(MGD)	(GPM)
0.1%	2.470	9.820	6.346	4,407	5.1%	17.638	70.129	45.322	31,474
0.2%	3.493	13.888	8.975	6,233	5.2%	17.810	70.813	45.765	31,781
0.3%	4.278	17.009	10.992	7,634	5.3%	17.980	71.491	46.203	32,085
0.4%	4.940	19.640	12.693	8,814	5.4%	18.149	72.162	46.636	32,386
0.5%	5.523	21.958	14.191	9,855	5.5%	18.316	72.827	47.066	32,685
0.6%	6.050	24.054	15.545	10,795	5.6%	18.482	73.486	47.492	32,981
0.7%	6.534	25.981	16.791	11,660	5.7%	18.646	74.140	47.914	33,274
0.8%	6.986	27.775	17.950	12,466	5.8%	18.809	74.787	48.333	33,564
0.9%	7.409	29.460	19.039	13,222	5.9%	18.971	75.429	48.748	33,853
1.0%	7.810	31.054	20.069	13,937	6.0%	19.131	76.066	49.159	34,138
1.1%	8.191	32.569	21.049	14,617	6.1%	19.290	76.697	49.567	34,422
1.2%	8.556	34.018	21.985	15,267	6.2%	19.447	77.323	49.972	34,703
1.3%	8.905	35.407	22.882	15,890	6.3%	19.603	77.944	50.373	34,981
1.4%	9.241	36.743	23.746	16,490	6.4%	19.758	78.560	50.771	35,258
1.5%	9.565	38.033	24.580	17,069	6.5%	19.912	79.172	51.166	35,532
1.6%	9.879	39.280	25.386	17,629	6.6%	20.065	79.778	51.558	35,805
1.7%	10.183	40.489	26.167	18,171	6.7%	20.216	80.380	51.948	36,075
1.8%	10.478	41.663	26.926	18,698	6.8%	20.366	80.978	52.334	36,343
1.9%	10.766	42.805	27.663	19,211	6.9%	20.516	81.571	52.717	36,609
2.0%	11.045	43.917	28.382	19,710	7.0%	20.664	82.160	53.098	36,874
2.1%	11.318	45.001	29.083	20,196	7.1%	20.811	82.745	53.476	37,136
2.2%	11.584	46.060	29.767	20,672	7.2%	20.957	83.326	53.851	37,397
2.3%	11.845	47.095	30.436	21,136	7.3%	21.102	83.902	54.224	37,655
2.4%	12.099	48.108	31.091	21,591	7.4%	21.246	84.475	54.594	37,912
2.5%	12.349	49.100	31.732	22,036	7.5%	21.389	85.044	54.962	38,168
2.6%	12.593	50.073	32.360	22,473	7.6%	21.531	85.609	55.327	38,421
2.7%	12.833	51.026	32.977	22,901	7.7%	21.672	86.170	55.690	38,673
2.8%	13.069	51.963	33.582	23,321	7.8%	21.812	86.728	56.050	38,924
2.9%	13.300	52.882	34.176	23,734	7.9%	21.952	87.282	56.408	39,172
3.0%	13.528	53.787	34.761	24,139	8.0%	22.090	87.833	56.764	39,419
3.1%	13.751	54.676	35.335	24,538	8.1%	22.228	88.380	57.118	39,665
3.2%	13.971	55.550	35.901	24,931	8.2%	22.365	88.924	57.469	39,909
3.3%	14.188	56.412	36.457	25,318	8.3%	22.501	89.465	57.819	40,152
3.4%	14.401	57.260	37.006	25,698	8.4%	22.636	90.002	58.166	40,393
3.5%	14.611	58.096	37.546	26,074	8.5%	22.770	90.536	58.511	40,633
3.6%	14.819	58.920	38.078	26,443	8.6%	22.904	91.067	58.854	40,871
3.7%	15.023	59.733	38.604	26,808	8.7%	23.037	91.595	59.195	41,108
3.8%	15.225	60.535	39.122	27,168	8.8%	23.169	92.120	59.535	41,343
3.9%	15.424	61.326	39.633	27,523	8.9%	23.300	92.642	59.872	41,578
4.0%	15.620	62.107	40.138	27,874	9.0%	23.430	93.161	60.207	41,811
4.1%	15.814	62.879	40.637	28,220	9.1%	23.560	93.677	60.541	42,042
4.2%	16.006	63.641	41.129	28,562	9.2%	23.689	94.190	60.873	42,273
4.3%	16.195	64.394	41.616	28,900	9.3%	23.818	94.701	61.203	42,502
4.4%	16.383	65.139	42.097	29,234	9.4%	23.945	95.209	61.531	42,730
4.5%	16.568	65.875	42.573	29,565	9.5%	24.072	95.714	61.857	42,956
4.6%	16.751	66.603	43.043	29,891	9.6%	24.199	96.216	62.182	43,182
4.7%	16.932	67.323	43.509	30,214	9.7%	24.324	96.716	62.505	43,406
4.8%	17.111	68.035	43.969	30,534	9.8%	24.450	97.213	62.826	43,629
4.9%	17.288	68.740	44.425	30,851	9.9%	24.574	97.708	63.146	43,851
5.0%	17.464	69.438	44.876	31,164	10.0%	24.698	98.200	63.464	44,072

Velocity and Capacity for 30" RC Pipe

N= 0.013 | A= 4.909 | HR= 0.625

GRA %	VEL. FT/SEC	CAPACITY (CFS)	(MGD)	(GPM)	GRA %	VEL. FT/SEC	CAPACITY (CFS)	(MGD)	(GPM)
0.1%	2.649	13.006	8.405	5,837	5.1%	18.921	92.879	60.025	41,684
0.2%	3.747	18.393	11.887	8,255	5.2%	19.106	93.785	60.611	42,091
0.3%	4.589	22.526	14.558	10,110	5.3%	19.289	94.683	61.191	42,494
0.4%	5.299	26.011	16.810	11,674	5.4%	19.470	95.572	61.765	42,893
0.5%	5.924	29.082	18.795	13,052	5.5%	19.649	96.453	62.335	43,288
0.6%	6.490	31.857	20.588	14,298	5.6%	19.827	97.326	62.899	43,680
0.7%	7.010	34.410	22.238	15,443	5.7%	20.003	98.191	63.458	44,068
0.8%	7.494	36.786	23.774	16,509	5.8%	20.178	99.048	64.012	44,453
0.9%	7.948	39.017	25.216	17,511	5.9%	20.351	99.898	64.562	44,834
1.0%	8.378	41.128	26.580	18,458	6.0%	20.523	100.742	65.106	45,213
1.1%	8.787	43.135	27.877	19,359	6.1%	20.693	101.578	65.647	45,588
1.2%	9.178	45.053	29.116	20,220	6.2%	20.862	102.407	66.183	45,960
1.3%	9.553	46.893	30.305	21,045	6.3%	21.030	103.229	66.714	46,329
1.4%	9.913	48.663	31.449	21,840	6.4%	21.196	104.045	67.242	46,696
1.5%	10.261	50.371	32.553	22,606	6.5%	21.361	104.855	67.765	47,059
1.6%	10.598	52.023	33.621	23,348	6.6%	21.525	105.659	68.284	47,420
1.7%	10.924	53.624	34.656	24,066	6.7%	21.687	106.456	68.800	47,777
1.8%	11.241	55.178	35.660	24,764	6.8%	21.848	107.248	69.311	48,133
1.9%	11.549	56.690	36.637	25,443	6.9%	22.008	108.033	69.819	48,485
2.0%	11.849	58.163	37.589	26,104	7.0%	22.167	108.813	70.323	48,835
2.1%	12.142	59.599	38.517	26,748	7.1%	22.325	109.588	70.823	49,183
2.2%	12.427	61.002	39.424	27,378	7.2%	22.482	110.357	71.321	49,528
2.3%	12.707	62.373	40.310	27,993	7.3%	22.637	111.121	71.814	49,871
2.4%	12.980	63.715	41.177	28,595	7.4%	22.792	111.879	72.304	50,211
2.5%	13.247	65.028	42.026	29,185	7.5%	22.945	112.632	72.791	50,549
2.6%	13.510	66.316	42.858	29,763	7.6%	23.098	113.381	73.275	50,885
2.7%	13.767	67.579	43.675	30,330	7.7%	23.249	114.124	73.755	51,219
2.8%	14.020	68.820	44.476	30,886	7.8%	23.400	114.863	74.233	51,551
2.9%	14.268	70.038	45.263	31,433	7.9%	23.549	115.597	74.707	51,880
3.0%	14.512	71.235	46.037	31,970	8.0%	23.698	116.326	75.178	52,207
3.1%	14.752	72.413	46.798	32,499	8.1%	23.845	117.051	75.647	52,533
3.2%	14.988	73.571	47.547	33,019	8.2%	23.992	117.771	76.112	52,856
3.3%	15.220	74.712	48.284	33,531	8.3%	24.138	118.487	76.575	53,177
3.4%	15.449	75.835	49.010	34,035	8.4%	24.283	119.199	77.035	53,496
3.5%	15.675	76.943	49.726	34,532	8.5%	24.427	119.906	77.492	53,814
3.6%	15.897	78.034	50.431	35,022	8.6%	24.570	120.610	77.947	54,130
3.7%	16.116	79.110	51.127	35,505	8.7%	24.713	121.309	78.399	54,443
3.8%	16.333	80.172	51.813	35,981	8.8%	24.854	122.004	78.848	54,755
3.9%	16.546	81.220	52.490	36,452	8.9%	24.995	122.695	79.295	55,066
4.0%	16.757	82.255	53.159	36,916	9.0%	25.135	123.383	79.739	55,374
4.1%	16.965	83.277	53.820	37,375	9.1%	25.275	124.066	80.181	55,681
4.2%	17.171	84.286	54.472	37,828	9.2%	25.413	124.746	80.620	55,986
4.3%	17.374	85.284	55.117	38,275	9.3%	25.551	125.422	81.057	56,289
4.4%	17.575	86.270	55.754	38,718	9.4%	25.688	126.095	81.491	56,591
4.5%	17.773	87.245	56.384	39,155	9.5%	25.824	126.764	81.924	56,892
4.6%	17.970	88.209	57.007	39,588	9.6%	25.960	127.429	82.354	57,190
4.7%	18.164	89.162	57.623	40,016	9.7%	26.094	128.091	82.782	57,487
4.8%	18.356	90.106	58.233	40,440	9.8%	26.229	128.750	83.207	57,783
4.9%	18.546	91.040	58.836	40,859	9.9%	26.362	129.405	83.631	58,077
5.0%	18.735	91.964	59.434	41,273	10.0%	26.495	130.057	84.052	58,369

Velocity and Capacity for 36" RC Pipe

N= 0.013 | A= 7.069 | HR= 0.750

GRA %	VEL. FT/SEC	CAPACITY (CFS)	(MGD)	(GPM)	GRA %	VEL. FT/SEC	CAPACITY (CFS)	(MGD)	(GPM)
0.1%	2.992	21.149	13.668	9,492	5.1%	21.367	151.032	97.608	67,783
0.2%	4.231	29.909	19.329	13,423	5.2%	21.575	152.505	98.560	68,444
0.3%	5.182	36.631	23.673	16,440	5.3%	21.782	153.965	99.503	69,099
0.4%	5.984	42.297	27.336	18,983	5.4%	21.986	155.410	100.437	69,748
0.5%	6.690	47.290	30.562	21,224	5.5%	22.189	156.843	101.363	70,391
0.6%	7.329	51.803	33.479	23,249	5.6%	22.390	158.262	102.280	71,028
0.7%	7.916	55.954	36.162	25,112	5.7%	22.589	159.669	103.190	71,659
0.8%	8.462	59.817	38.658	26,846	5.8%	22.786	161.063	104.091	72,285
0.9%	8.976	63.446	41.003	28,475	5.9%	22.981	162.446	104.984	72,906
1.0%	9.461	66.878	43.221	30,015	6.0%	23.175	163.817	105.870	73,521
1.1%	9.923	70.142	45.331	31,480	6.1%	23.368	165.176	106.749	74,131
1.2%	10.364	73.261	47.347	32,880	6.2%	23.558	166.525	107.620	74,736
1.3%	10.788	76.253	49.280	34,222	6.3%	23.748	167.862	108.485	75,337
1.4%	11.195	79.131	51.140	35,514	6.4%	23.935	169.189	109.342	75,932
1.5%	11.588	81.908	52.935	36,760	6.5%	24.122	170.506	110.193	76,523
1.6%	11.968	84.595	54.671	37,966	6.6%	24.306	171.813	111.038	77,109
1.7%	12.336	87.198	56.354	39,135	6.7%	24.490	173.109	111.876	77,691
1.8%	12.694	89.726	57.988	40,269	6.8%	24.672	174.396	112.707	78,269
1.9%	13.041	92.185	59.576	41,373	6.9%	24.853	175.674	113.533	78,842
2.0%	13.380	94.580	61.124	42,447	7.0%	25.032	176.942	114.353	79,412
2.1%	13.711	96.915	62.634	43,496	7.1%	25.210	178.202	115.167	79,977
2.2%	14.033	99.196	64.108	44,519	7.2%	25.387	179.452	115.975	80,538
2.3%	14.349	101.425	65.548	45,520	7.3%	25.563	180.694	116.778	81,096
2.4%	14.657	103.607	66.958	46,499	7.4%	25.737	181.928	117.575	81,649
2.5%	14.960	105.743	68.339	47,458	7.5%	25.911	183.153	118.366	82,199
2.6%	15.256	107.837	69.692	48,397	7.6%	26.083	184.370	119.153	82,745
2.7%	15.546	109.892	71.020	49,319	7.7%	26.254	185.579	119.934	83,288
2.8%	15.832	111.908	72.323	50,224	7.8%	26.424	186.780	120.711	83,827
2.9%	16.112	113.889	73.603	51,113	7.9%	26.593	187.973	121.482	84,362
3.0%	16.387	115.836	74.862	51,987	8.0%	26.761	189.159	122.248	84,895
3.1%	16.658	117.751	76.099	52,847	8.1%	26.927	190.338	123.010	85,424
3.2%	16.925	119.635	77.317	53,692	8.2%	27.093	191.509	123.767	85,949
3.3%	17.187	121.490	78.515	54,525	8.3%	27.258	192.673	124.519	86,472
3.4%	17.446	123.317	79.696	55,345	8.4%	27.421	193.831	125.267	86,991
3.5%	17.700	125.117	80.860	56,153	8.5%	27.584	194.981	126.011	87,507
3.6%	17.952	126.892	82.007	56,949	8.6%	27.746	196.125	126.750	88,021
3.7%	18.199	128.642	83.138	57,735	8.7%	27.907	197.262	127.485	88,531
3.8%	18.443	130.369	84.254	58,510	8.8%	28.067	198.392	128.215	89,038
3.9%	18.685	132.073	85.355	59,275	8.9%	28.226	199.516	128.942	89,543
4.0%	18.923	133.756	86.443	60,030	9.0%	28.384	200.634	129.664	90,044
4.1%	19.158	135.417	87.517	60,775	9.1%	28.541	201.745	130.382	90,543
4.2%	19.390	137.059	88.577	61,512	9.2%	28.698	202.851	131.097	91,039
4.3%	19.619	138.681	89.626	62,240	9.3%	28.853	203.950	131.807	91,533
4.4%	19.846	140.284	90.662	62,960	9.4%	29.008	205.044	132.514	92,024
4.5%	20.070	141.870	91.686	63,671	9.5%	29.162	206.132	133.217	92,512
4.6%	20.292	143.437	92.699	64,375	9.6%	29.315	207.214	133.916	92,998
4.7%	20.512	144.988	93.702	65,071	9.7%	29.467	208.290	134.612	93,481
4.8%	20.729	146.522	94.693	65,759	9.8%	29.619	209.361	135.304	93,961
4.9%	20.943	148.041	95.674	66,441	9.9%	29.769	210.426	135.993	94,439
5.0%	21.156	149.544	96.646	67,115	10.0%	29.919	211.487	136.678	94,915

Velocity and Capacity for 42" RC Pipe

N= 0.013 | A= 9.621 | HR= 0.875

GRA %	VEL. FT/SEC	CAPACITY (CFS)	(MGD)	(GPM)	GRA %	VEL. FT/SEC	CAPACITY (CFS)	(MGD)	(GPM)
0.1%	3.316	31.901	20.617	14,317	5.1%	23.679	227.820	147.234	102,246
0.2%	4.689	45.115	29.157	20,248	5.2%	23.910	230.043	148.670	103,243
0.3%	5.743	55.255	35.709	24,798	5.3%	24.139	232.245	150.093	104,231
0.4%	6.631	63.802	41.234	28,635	5.4%	24.366	234.425	151.503	105,210
0.5%	7.414	71.333	46.101	32,014	5.5%	24.590	236.586	152.899	106,180
0.6%	8.122	78.142	50.501	35,070	5.6%	24.813	238.727	154.283	107,141
0.7%	8.773	84.403	54.547	37,880	5.7%	25.033	240.849	155.654	108,093
0.8%	9.378	90.230	58.313	40,495	5.8%	25.252	242.953	157.013	109,037
0.9%	9.947	95.704	61.851	42,952	5.9%	25.469	245.038	158.361	109,973
1.0%	10.485	100.881	65.196	45,275	6.0%	25.684	247.106	159.698	110,901
1.1%	10.997	105.804	68.378	47,485	6.1%	25.897	249.157	161.023	111,822
1.2%	11.486	110.509	71.419	49,597	6.2%	26.108	251.191	162.337	112,734
1.3%	11.955	115.022	74.335	51,622	6.3%	26.318	253.208	163.641	113,640
1.4%	12.406	119.364	77.141	53,570	6.4%	26.526	255.210	164.935	114,538
1.5%	12.842	123.553	79.849	55,451	6.5%	26.732	257.196	166.219	115,430
1.6%	13.263	127.605	82.468	57,269	6.6%	26.937	259.167	167.492	116,314
1.7%	13.671	131.532	85.006	59,032	6.7%	27.141	261.123	168.756	117,192
1.8%	14.068	135.346	87.470	60,743	6.8%	27.342	263.064	170.011	118,063
1.9%	14.453	139.054	89.867	62,408	6.9%	27.543	264.992	171.257	118,928
2.0%	14.828	142.667	92.201	64,029	7.0%	27.742	266.905	172.493	119,787
2.1%	15.195	146.190	94.478	65,610	7.1%	27.939	268.805	173.721	120,640
2.2%	15.552	149.630	96.702	67,154	7.2%	28.135	270.691	174.940	121,486
2.3%	15.902	152.993	98.875	68,663	7.3%	28.330	272.564	176.151	122,327
2.4%	16.244	156.284	101.002	70,140	7.4%	28.523	274.425	177.353	123,162
2.5%	16.579	159.506	103.084	71,586	7.5%	28.715	276.273	178.547	123,991
2.6%	16.907	162.665	105.126	73,004	7.6%	28.906	278.109	179.734	124,815
2.7%	17.229	165.764	107.128	74,395	7.7%	29.096	279.932	180.912	125,634
2.8%	17.545	168.806	109.094	75,760	7.8%	29.284	281.744	182.083	126,447
2.9%	17.856	171.793	111.025	77,101	7.9%	29.471	283.544	183.247	127,255
3.0%	18.161	174.730	112.923	78,419	8.0%	29.657	285.333	184.403	128,058
3.1%	18.461	177.619	114.790	79,715	8.1%	29.842	287.111	185.552	128,855
3.2%	18.757	180.461	116.627	80,991	8.2%	30.025	288.878	186.694	129,648
3.3%	19.048	183.259	118.435	82,246	8.3%	30.208	290.634	187.829	130,437
3.4%	19.334	186.015	120.216	83,483	8.4%	30.389	292.380	188.957	131,220
3.5%	19.616	188.730	121.971	84,702	8.5%	30.570	294.115	190.078	131,999
3.6%	19.894	191.407	123.701	85,904	8.6%	30.749	295.840	191.193	132,773
3.7%	20.169	194.048	125.408	87,089	8.7%	30.927	297.555	192.301	133,543
3.8%	20.440	196.652	127.091	88,258	8.8%	31.104	299.260	193.403	134,308
3.9%	20.707	199.223	128.752	89,411	8.9%	31.281	300.956	194.499	135,069
4.0%	20.971	201.761	130.393	90,550	9.0%	31.456	302.642	195.589	135,826
4.1%	21.231	204.268	132.012	91,675	9.1%	31.630	304.318	196.672	136,578
4.2%	21.489	206.744	133.613	92,787	9.2%	31.804	305.986	197.750	137,326
4.3%	21.743	209.190	135.194	93,885	9.3%	31.976	307.644	198.822	138,071
4.4%	21.994	211.609	136.757	94,970	9.4%	32.147	309.294	199.888	138,811
4.5%	22.243	214.000	138.302	96,043	9.5%	32.318	310.935	200.948	139,548
4.6%	22.489	216.365	139.830	97,104	9.6%	32.488	312.567	202.003	140,280
4.7%	22.732	218.704	141.342	98,154	9.7%	32.656	314.191	203.053	141,009
4.8%	22.972	221.018	142.838	99,193	9.8%	32.824	315.806	204.097	141,734
4.9%	23.210	223.309	144.318	100,221	9.9%	32.991	317.413	205.135	142,455
5.0%	23.446	225.576	145.783	101,238	10.0%	33.157	319.012	206.169	143,173

Velocity and Capacity for 48" RC Pipe

N= 0.013 | A= 12.566 | HR= 1.000

GRA %	VEL. FT/SEC	CAPACITY (CFS)	(MGD)	(GPM)	GRA %	VEL. FT/SEC	CAPACITY (CFS)	(MGD)	(GPM)
0.1%	3.624	45.546	29.435	20,441	5.1%	25.884	325.265	210.210	145,979
0.2%	5.126	64.412	41.628	28,908	5.2%	26.136	328.439	212.261	147,403
0.3%	6.278	78.888	50.983	35,405	5.3%	26.386	331.582	214.292	148,814
0.4%	7.249	91.093	58.871	40,882	5.4%	26.634	334.695	216.304	150,211
0.5%	8.105	101.845	65.819	45,708	5.5%	26.880	337.780	218.298	151,596
0.6%	8.878	111.565	72.101	50,070	5.6%	27.123	340.837	220.273	152,968
0.7%	9.589	120.504	77.878	54,082	5.7%	27.364	343.867	222.231	154,327
0.8%	10.252	128.824	83.256	57,816	5.8%	27.603	346.870	224.172	155,675
0.9%	10.873	136.639	88.306	61,323	5.9%	27.840	349.848	226.097	157,012
1.0%	11.462	144.030	93.083	64,641	6.0%	28.075	352.800	228.005	158,337
1.1%	12.021	151.060	97.626	67,796	6.1%	28.308	355.728	229.897	159,651
1.2%	12.555	157.777	101.967	70,810	6.2%	28.539	358.632	231.774	160,954
1.3%	13.068	164.219	106.130	73,702	6.3%	28.768	361.512	233.635	162,247
1.4%	13.561	170.419	110.137	76,484	6.4%	28.996	364.370	235.482	163,529
1.5%	14.037	176.400	114.002	79,168	6.5%	29.221	367.206	237.315	164,802
1.6%	14.498	182.185	117.741	81,765	6.6%	29.445	370.020	239.133	166,065
1.7%	14.944	187.792	121.365	84,281	6.7%	29.667	372.812	240.938	167,318
1.8%	15.377	193.236	124.883	86,725	6.8%	29.888	375.584	242.730	168,562
1.9%	15.799	198.532	128.305	89,101	6.9%	30.107	378.336	244.508	169,797
2.0%	16.209	203.689	131.639	91,416	7.0%	30.324	381.067	246.273	171,023
2.1%	16.609	208.719	134.889	93,673	7.1%	30.540	383.780	248.026	172,240
2.2%	17.000	213.631	138.064	95,878	7.2%	30.755	386.473	249.767	173,449
2.3%	17.382	218.432	141.167	98,032	7.3%	30.967	389.147	251.495	174,649
2.4%	17.756	223.130	144.203	100,141	7.4%	31.179	391.804	253.212	175,842
2.5%	18.122	227.731	147.176	102,206	7.5%	31.389	394.442	254.917	177,026
2.6%	18.481	232.241	150.091	104,230	7.6%	31.597	397.063	256.611	178,202
2.7%	18.833	236.665	152.950	106,215	7.7%	31.804	399.667	258.294	179,370
2.8%	19.179	241.008	155.757	108,164	7.8%	32.010	402.254	259.965	180,531
2.9%	19.518	245.274	158.514	110,079	7.9%	32.215	404.824	261.626	181,685
3.0%	19.852	249.467	161.224	111,961	8.0%	32.418	407.378	263.277	182,831
3.1%	20.180	253.591	163.889	113,812	8.1%	32.620	409.916	264.917	183,970
3.2%	20.503	257.649	166.511	115,633	8.2%	32.821	412.439	266.548	185,103
3.3%	20.821	261.643	169.093	117,426	8.3%	33.020	414.946	268.168	186,228
3.4%	21.134	265.578	171.636	119,191	8.4%	33.219	417.438	269.779	187,346
3.5%	21.443	269.455	174.141	120,932	8.5%	33.416	419.916	271.380	188,458
3.6%	21.747	273.278	176.612	122,647	8.6%	33.612	422.379	272.972	189,564
3.7%	22.047	277.047	179.048	124,339	8.7%	33.807	424.827	274.554	190,662
3.8%	22.343	280.766	181.451	126,008	8.8%	34.000	427.262	276.127	191,755
3.9%	22.635	284.436	183.823	127,655	8.9%	34.193	429.683	277.692	192,842
4.0%	22.923	288.060	186.165	129,281	9.0%	34.385	432.090	279.248	193,922
4.1%	23.208	291.638	188.478	130,887	9.1%	34.575	434.484	280.795	194,996
4.2%	23.489	295.174	190.762	132,474	9.2%	34.765	436.864	282.333	196,065
4.3%	23.767	298.667	193.020	134,042	9.3%	34.953	439.232	283.864	197,127
4.4%	24.042	302.120	195.252	135,591	9.4%	35.140	441.587	285.386	198,184
4.5%	24.314	305.534	197.458	137,123	9.5%	35.327	443.930	286.900	199,236
4.6%	24.582	308.910	199.640	138,639	9.6%	35.512	446.260	288.406	200,282
4.7%	24.848	312.249	201.798	140,138	9.7%	35.697	448.579	289.904	201,322
4.8%	25.111	315.554	203.934	141,621	9.8%	35.880	450.885	291.394	202,357
4.9%	25.371	318.824	206.047	143,088	9.9%	36.063	453.180	292.877	203,387
5.0%	25.629	322.061	208.139	144,541	10.0%	36.245	455.463	294.353	204,412

Velocity and Capacity for 54" RC Pipe

N= 0.013 | A= 15.904 | HR= 1.125

GRA %	VEL. FT/SEC	CAPACITY (CFS)	(MGD)	(GPM)	GRA %	VEL. FT/SEC	CAPACITY (CFS)	(MGD)	(GPM)
0.1%	3.921	62.353	40.297	27,984	5.1%	27.998	445.292	287.780	199,847
0.2%	5.544	88.181	56.989	39,576	5.2%	28.271	449.636	290.587	201,797
0.3%	6.791	107.999	69.797	48,470	5.3%	28.542	453.939	293.368	203,728
0.4%	7.841	124.707	80.594	55,968	5.4%	28.810	458.201	296.123	205,641
0.5%	8.767	139.426	90.107	62,574	5.5%	29.075	462.425	298.852	207,536
0.6%	9.603	152.734	98.708	68,547	5.6%	29.339	466.609	301.557	209,414
0.7%	10.373	164.971	106.616	74,039	5.7%	29.599	470.757	304.237	211,276
0.8%	11.089	176.362	113.978	79,151	5.8%	29.858	474.869	306.894	213,121
0.9%	11.762	187.060	120.892	83,952	5.9%	30.114	478.945	309.529	214,950
1.0%	12.398	197.178	127.431	88,494	6.0%	30.368	482.987	312.141	216,764
1.1%	13.003	206.803	133.651	92,813	6.1%	30.620	486.995	314.731	218,563
1.2%	13.581	215.998	139.594	96,940	6.2%	30.870	490.970	317.300	220,348
1.3%	14.136	224.818	145.294	100,898	6.3%	31.118	494.914	319.849	222,117
1.4%	14.669	233.305	150.778	104,707	6.4%	31.364	498.826	322.378	223,873
1.5%	15.184	241.493	156.070	108,382	6.5%	31.608	502.708	324.886	225,616
1.6%	15.682	249.413	161.189	111,937	6.6%	31.851	506.561	327.376	227,344
1.7%	16.165	257.089	166.150	115,382	6.7%	32.091	510.384	329.847	229,060
1.8%	16.633	264.543	170.967	118,727	6.8%	32.330	514.179	332.299	230,763
1.9%	17.089	271.792	175.651	121,980	6.9%	32.566	517.945	334.734	232,454
2.0%	17.533	278.852	180.215	125,149	7.0%	32.801	521.685	337.151	234,132
2.1%	17.966	285.739	184.665	128,240	7.1%	33.035	525.398	339.550	235,799
2.2%	18.389	292.463	189.011	131,257	7.2%	33.267	529.085	341.933	237,454
2.3%	18.802	299.036	193.259	134,207	7.3%	33.497	532.747	344.299	239,097
2.4%	19.207	305.468	197.415	137,094	7.4%	33.726	536.383	346.650	240,729
2.5%	19.603	311.767	201.486	139,921	7.5%	33.953	539.995	348.984	242,350
2.6%	19.991	317.941	205.476	142,692	7.6%	34.178	543.584	351.303	243,960
2.7%	20.372	323.997	209.390	145,410	7.7%	34.402	547.148	353.606	245,560
2.8%	20.745	329.943	213.233	148,078	7.8%	34.625	550.690	355.895	247,149
2.9%	21.113	335.783	217.007	150,699	7.9%	34.846	554.208	358.169	248,729
3.0%	21.474	341.523	220.717	153,276	8.0%	35.066	557.705	360.429	250,298
3.1%	21.829	347.169	224.365	155,809	8.1%	35.285	561.180	362.675	251,857
3.2%	22.178	352.724	227.955	158,302	8.2%	35.502	564.633	364.907	253,407
3.3%	22.522	358.192	231.490	160,757	8.3%	35.718	568.066	367.125	254,948
3.4%	22.860	363.579	234.971	163,174	8.4%	35.932	571.478	369.330	256,479
3.5%	23.194	368.887	238.401	165,557	8.5%	36.145	574.869	371.522	258,001
3.6%	23.523	374.120	241.783	167,905	8.6%	36.357	578.241	373.701	259,514
3.7%	23.848	379.280	245.118	170,221	8.7%	36.568	581.593	375.867	261,019
3.8%	24.168	384.372	248.409	172,506	8.8%	36.778	584.926	378.021	262,515
3.9%	24.484	389.396	251.656	174,761	8.9%	36.986	588.240	380.163	264,002
4.0%	24.796	394.357	254.862	176,987	9.0%	37.193	591.535	382.293	265,481
4.1%	25.104	399.256	258.028	179,186	9.1%	37.399	594.813	384.411	266,952
4.2%	25.408	404.096	261.156	181,358	9.2%	37.604	598.072	386.517	268,415
4.3%	25.709	408.878	264.246	183,504	9.3%	37.808	601.314	388.612	269,870
4.4%	26.006	413.605	267.301	185,626	9.4%	38.011	604.538	390.696	271,317
4.5%	26.300	418.279	270.322	187,723	9.5%	38.213	607.745	392.768	272,756
4.6%	26.590	422.901	273.309	189,798	9.6%	38.413	610.935	394.830	274,188
4.7%	26.878	427.473	276.264	191,850	9.7%	38.613	614.109	396.881	275,612
4.8%	27.162	431.996	279.187	193,880	9.8%	38.811	617.266	398.922	277,029
4.9%	27.444	436.473	282.080	195,889	9.9%	39.009	620.408	400.952	278,439
5.0%	27.722	440.904	284.944	197,878	10.0%	39.205	623.533	402.972	279,842

Velocity and Capacity for 60" RC Pipe

N= 0.013 | A= 19.635 | HR= 1.250

GRA %	VEL. FT/SEC	CAPACITY (CFS)	(MGD)	(GPM)	GRA %	VEL. FT/SEC	CAPACITY (CFS)	(MGD)	(GPM)
0.1%	4.206	82.581	53.370	37,062	5.1%	30.035	589.745	381.136	264,678
0.2%	5.948	116.787	75.476	52,414	5.2%	30.329	595.499	384.854	267,260
0.3%	7.285	143.034	92.439	64,194	5.3%	30.619	601.198	388.537	269,818
0.4%	8.412	165.162	106.739	74,125	5.4%	30.906	606.843	392.186	272,351
0.5%	9.404	184.656	119.338	82,874	5.5%	31.191	612.436	395.800	274,861
0.6%	10.302	202.281	130.729	90,784	5.6%	31.473	617.979	399.382	277,349
0.7%	11.128	218.488	141.203	98,058	5.7%	31.753	623.472	402.932	279,814
0.8%	11.896	233.574	150.952	104,828	5.8%	32.030	628.917	406.452	282,258
0.9%	12.617	247.743	160.109	111,187	5.9%	32.305	634.316	409.941	284,681
1.0%	13.300	261.144	168.770	117,201	6.0%	32.578	639.669	413.400	287,083
1.1%	13.949	273.890	177.007	122,922	6.1%	32.848	644.977	416.831	289,466
1.2%	14.569	286.069	184.878	128,388	6.2%	33.117	650.242	420.233	291,829
1.3%	15.164	297.750	192.427	133,630	6.3%	33.383	655.465	423.609	294,173
1.4%	15.737	308.989	199.691	138,674	6.4%	33.646	660.647	426.958	296,498
1.5%	16.289	319.834	206.700	143,542	6.5%	33.908	665.788	430.280	298,806
1.6%	16.823	330.324	213.479	148,249	6.6%	34.168	670.890	433.578	301,096
1.7%	17.341	340.490	220.049	152,812	6.7%	34.426	675.954	436.850	303,368
1.8%	17.844	350.361	226.428	157,242	6.8%	34.682	680.979	440.098	305,624
1.9%	18.333	359.962	232.633	161,551	6.9%	34.936	685.968	443.322	307,863
2.0%	18.809	369.313	238.677	165,748	7.0%	35.188	690.921	446.523	310,085
2.1%	19.273	378.433	244.571	169,841	7.1%	35.439	695.839	449.701	312,292
2.2%	19.727	387.339	250.326	173,838	7.2%	35.687	700.722	452.857	314,484
2.3%	20.170	396.044	255.952	177,745	7.3%	35.934	705.571	455.991	316,660
2.4%	20.604	404.562	261.457	181,567	7.4%	36.180	710.388	459.104	318,822
2.5%	21.029	412.904	266.849	185,311	7.5%	36.423	715.171	462.195	320,969
2.6%	21.446	421.081	272.133	188,981	7.6%	36.665	719.923	465.266	323,102
2.7%	21.854	429.103	277.317	192,581	7.7%	36.906	724.644	468.317	325,220
2.8%	22.255	436.977	282.406	196,115	7.8%	37.145	729.335	471.348	327,325
2.9%	22.649	444.712	287.405	199,587	7.9%	37.382	733.995	474.360	329,417
3.0%	23.036	452.314	292.318	202,999	8.0%	37.618	738.626	477.353	331,495
3.1%	23.417	459.791	297.150	206,354	8.1%	37.852	743.228	480.327	333,561
3.2%	23.792	467.148	301.905	209,656	8.2%	38.085	747.802	483.283	335,613
3.3%	24.161	474.391	306.586	212,907	8.3%	38.317	752.348	486.221	337,654
3.4%	24.524	481.525	311.196	216,108	8.4%	38.547	756.866	489.141	339,682
3.5%	24.882	488.555	315.739	219,264	8.5%	38.776	761.358	492.044	341,697
3.6%	25.235	495.485	320.218	222,374	8.6%	39.003	765.824	494.930	343,702
3.7%	25.583	502.320	324.635	225,441	8.7%	39.229	770.263	497.799	345,694
3.8%	25.926	509.063	328.993	228,467	8.8%	39.454	774.677	500.652	347,675
3.9%	26.265	515.717	333.294	231,454	8.9%	39.678	779.066	503.489	349,645
4.0%	26.600	522.287	337.540	234,403	9.0%	39.900	783.431	506.310	351,604
4.1%	26.930	528.776	341.733	237,314	9.1%	40.121	787.771	509.115	353,552
4.2%	27.257	535.185	345.875	240,191	9.2%	40.341	792.088	511.904	355,489
4.3%	27.579	541.519	349.969	243,034	9.3%	40.559	796.381	514.679	357,416
4.4%	27.898	547.780	354.015	245,843	9.4%	40.777	800.651	517.439	359,332
4.5%	28.213	553.969	358.015	248,621	9.5%	40.993	804.899	520.184	361,239
4.6%	28.525	560.091	361.971	251,369	9.6%	41.208	809.124	522.914	363,135
4.7%	28.834	566.146	365.884	254,086	9.7%	41.422	813.327	525.631	365,021
4.8%	29.139	572.137	369.756	256,775	9.8%	41.635	817.509	528.333	366,898
4.9%	29.441	578.066	373.588	259,436	9.9%	41.847	821.669	531.022	368,765
5.0%	29.740	583.935	377.381	262,070	10.0%	42.058	825.809	533.697	370,623

Velocity and Capacity for 66" RC Pipe

N= 0.013 | A= 23.758 | HR= 1.375

GRA %	VEL. FT/SEC	CAPACITY (CFS)	(MGD)	(GPM)	GRA %	VEL. FT/SEC	CAPACITY (CFS)	(MGD)	(GPM)
0.1%	4.482	106.478	68.814	47,787	5.1%	32.006	760.405	491.429	341,270
0.2%	6.338	150.583	97.317	67,581	5.2%	32.318	767.824	496.223	344,599
0.3%	7.763	184.425	119.189	82,770	5.3%	32.627	775.172	500.972	347,897
0.4%	8.963	212.956	137.628	95,575	5.4%	32.934	782.450	505.676	351,164
0.5%	10.021	238.092	153.872	106,856	5.5%	33.237	789.662	510.337	354,400
0.6%	10.978	260.817	168.559	117,055	5.6%	33.538	796.809	514.955	357,608
0.7%	11.858	281.714	182.064	126,433	5.7%	33.836	803.891	519.533	360,786
0.8%	12.676	301.165	194.635	135,163	5.8%	34.132	810.912	524.070	363,938
0.9%	13.445	319.434	206.441	143,362	5.9%	34.425	817.873	528.569	367,061
1.0%	14.172	336.713	217.608	151,117	6.0%	34.715	824.775	533.029	370,159
1.1%	14.864	353.148	228.229	158,493	6.1%	35.003	831.620	537.453	373,231
1.2%	15.525	368.851	238.378	165,540	6.2%	35.289	838.409	541.840	376,278
1.3%	16.159	383.912	248.112	172,300	6.3%	35.573	845.143	546.192	379,300
1.4%	16.769	398.404	257.478	178,804	6.4%	35.854	851.824	550.510	382,299
1.5%	17.358	412.388	266.515	185,080	6.5%	36.133	858.453	554.794	385,274
1.6%	17.927	425.912	275.255	191,149	6.6%	36.410	865.032	559.046	388,226
1.7%	18.479	439.020	283.726	197,032	6.7%	36.684	871.560	563.265	391,156
1.8%	19.014	451.748	291.952	202,744	6.8%	36.957	878.040	567.453	394,064
1.9%	19.535	464.127	299.952	208,300	6.9%	37.228	884.473	571.610	396,951
2.0%	20.043	476.184	307.745	213,711	7.0%	37.497	890.859	575.737	399,818
2.1%	20.538	487.944	315.344	218,989	7.1%	37.764	897.200	579.835	402,663
2.2%	21.021	499.426	322.765	224,142	7.2%	38.029	903.496	583.904	405,489
2.3%	21.494	510.651	330.019	229,180	7.3%	38.292	909.749	587.945	408,295
2.4%	21.956	521.634	337.117	234,109	7.4%	38.553	915.959	591.958	411,082
2.5%	22.409	532.390	344.069	238,937	7.5%	38.813	922.127	595.945	413,850
2.6%	22.852	542.934	350.883	243,669	7.6%	39.071	928.254	599.904	416,600
2.7%	23.288	553.276	357.567	248,310	7.7%	39.327	934.341	603.838	419,332
2.8%	23.715	563.429	364.128	252,867	7.8%	39.581	940.388	607.747	422,046
2.9%	24.135	573.402	370.573	257,343	7.9%	39.834	946.397	611.630	424,743
3.0%	24.547	583.204	376.909	261,742	8.0%	40.086	952.368	615.489	427,423
3.1%	24.953	592.845	383.139	266,069	8.1%	40.335	958.302	619.324	430,086
3.2%	25.352	602.331	389.269	270,326	8.2%	40.584	964.199	623.135	432,733
3.3%	25.746	611.670	395.305	274,517	8.3%	40.830	970.061	626.923	435,363
3.4%	26.133	620.868	401.250	278,646	8.4%	41.076	975.887	630.689	437,978
3.5%	26.514	629.932	407.108	282,714	8.5%	41.319	981.679	634.432	440,577
3.6%	26.890	638.868	412.883	286,724	8.6%	41.562	987.437	638.153	443,162
3.7%	27.261	647.681	418.578	290,679	8.7%	41.803	993.161	641.852	445,731
3.8%	27.627	656.375	424.197	294,581	8.8%	42.042	998.852	645.530	448,285
3.9%	27.988	664.955	429.742	298,432	8.9%	42.280	1,004.512	649.188	450,825
4.0%	28.345	673.426	435.216	302,234	9.0%	42.517	1,010.139	652.825	453,350
4.1%	28.697	681.792	440.623	305,988	9.1%	42.753	1,015.736	656.441	455,862
4.2%	29.045	690.056	445.964	309,697	9.2%	42.987	1,021.301	660.038	458,360
4.3%	29.389	698.223	451.242	313,363	9.3%	43.220	1,026.837	663.616	460,844
4.4%	29.728	706.295	456.459	316,985	9.4%	43.452	1,032.343	667.174	463,315
4.5%	30.064	714.276	461.617	320,567	9.5%	43.682	1,037.819	670.714	465,773
4.6%	30.397	722.169	466.718	324,109	9.6%	43.912	1,043.267	674.234	468,218
4.7%	30.725	729.977	471.763	327,613	9.7%	44.140	1,048.687	677.737	470,651
4.8%	31.050	737.701	476.756	331,080	9.8%	44.367	1,054.079	681.222	473,070
4.9%	31.372	745.346	481.696	334,511	9.9%	44.593	1,059.443	684.688	475,478
5.0%	31.691	752.913	486.587	337,907	10.0%	44.817	1,064.780	688.138	477,873

Back to Appendix VIII

Velocity and Capacity for 72" RC Pipe

N= 0.013 | A= 28.274 | HR= 1.500

GRA %	VEL. FT/SEC	CAPACITY (CFS)	(MGD)	(GPM)	GRA %	VEL. FT/SEC	CAPACITY (CFS)	(MGD)	(GPM)
0.1%	4.749	134.286	86.785	60,267	5.1%	33.917	958.991	619.769	430,395
0.2%	6.717	189.909	122.733	85,231	5.2%	34.248	968.347	625.816	434,594
0.3%	8.226	232.589	150.316	104,386	5.3%	34.576	977.614	631.805	438,753
0.4%	9.499	268.571	173.570	120,535	5.4%	34.901	986.794	637.737	442,873
0.5%	10.620	300.272	194.057	134,762	5.5%	35.222	995.889	643.615	446,955
0.6%	11.634	328.931	212.579	147,624	5.6%	35.541	1,004.901	649.440	451,000
0.7%	12.566	355.286	229.612	159,453	5.7%	35.857	1,013.834	655.213	455,009
0.8%	13.433	379.817	245.465	170,462	5.8%	36.170	1,022.689	660.935	458,983
0.9%	14.248	402.857	260.355	180,802	5.9%	36.481	1,031.467	666.608	462,923
1.0%	15.019	424.648	274.438	190,582	6.0%	36.789	1,040.172	672.234	466,829
1.1%	15.752	445.375	287.833	199,884	6.1%	37.094	1,048.804	677.813	470,703
1.2%	16.452	465.179	300.632	208,772	6.2%	37.397	1,057.366	683.346	474,546
1.3%	17.124	484.174	312.908	217,297	6.3%	37.697	1,065.859	688.835	478,358
1.4%	17.771	502.451	324.720	225,500	6.4%	37.995	1,074.285	694.280	482,139
1.5%	18.394	520.086	336.117	233,415	6.5%	38.291	1,082.645	699.683	485,891
1.6%	18.998	537.142	347.140	241,070	6.6%	38.584	1,090.941	705.045	489,615
1.7%	19.582	553.674	357.824	248,489	6.7%	38.875	1,099.175	710.366	493,310
1.8%	20.150	569.726	368.198	255,693	6.8%	39.164	1,107.347	715.648	496,978
1.9%	20.702	585.337	378.287	262,699	6.9%	39.451	1,115.460	720.891	500,618
2.0%	21.240	600.543	388.114	269,524	7.0%	39.736	1,123.514	726.096	504,233
2.1%	21.764	615.374	397.699	276,180	7.1%	40.019	1,131.511	731.264	507,822
2.2%	22.277	629.855	407.058	282,679	7.2%	40.300	1,139.451	736.395	511,386
2.3%	22.777	644.011	416.206	289,032	7.3%	40.579	1,147.337	741.492	514,925
2.4%	23.267	657.862	425.158	295,249	7.4%	40.856	1,155.168	746.553	518,440
2.5%	23.747	671.428	433.925	301,337	7.5%	41.131	1,162.947	751.580	521,931
2.6%	24.217	684.725	442.519	307,305	7.6%	41.404	1,170.675	756.574	525,399
2.7%	24.679	697.768	450.948	313,158	7.7%	41.676	1,178.351	761.536	528,844
2.8%	25.131	710.573	459.223	318,905	7.8%	41.945	1,185.978	766.465	532,267
2.9%	25.576	723.150	467.352	324,550	7.9%	42.213	1,193.557	771.362	535,668
3.0%	26.013	735.513	475.341	330,098	8.0%	42.480	1,201.087	776.229	539,048
3.1%	26.443	747.671	483.199	335,555	8.1%	42.744	1,208.570	781.065	542,406
3.2%	26.867	759.634	490.930	340,924	8.2%	43.007	1,216.008	785.872	545,744
3.3%	27.283	771.412	498.542	346,210	8.3%	43.269	1,223.400	790.649	549,062
3.4%	27.693	783.013	506.039	351,416	8.4%	43.529	1,230.748	795.398	552,360
3.5%	28.098	794.444	513.427	356,547	8.5%	43.787	1,238.052	800.118	555,638
3.6%	28.496	805.714	520.710	361,604	8.6%	44.044	1,245.314	804.811	558,897
3.7%	28.889	816.827	527.893	366,592	8.7%	44.299	1,252.533	809.477	562,137
3.8%	29.277	827.792	534.979	371,513	8.8%	44.553	1,259.711	814.116	565,358
3.9%	29.660	838.613	541.972	376,370	8.9%	44.806	1,266.848	818.728	568,561
4.0%	30.038	849.297	548.877	381,164	9.0%	45.057	1,273.945	823.315	571,747
4.1%	30.411	859.847	555.695	385,900	9.1%	45.306	1,281.003	827.876	574,914
4.2%	30.780	870.270	562.431	390,577	9.2%	45.554	1,288.022	832.413	578,064
4.3%	31.144	880.570	569.087	395,200	9.3%	45.801	1,295.004	836.925	581,198
4.4%	31.504	890.750	575.667	399,769	9.4%	46.047	1,301.947	841.412	584,314
4.5%	31.860	900.815	582.172	404,286	9.5%	46.291	1,308.854	845.876	587,414
4.6%	32.212	910.769	588.605	408,753	9.6%	46.534	1,315.725	850.316	590,497
4.7%	32.560	920.616	594.968	413,172	9.7%	46.776	1,322.560	854.733	593,565
4.8%	32.905	930.358	601.264	417,545	9.8%	47.016	1,329.360	859.128	596,617
4.9%	33.246	939.999	607.495	421,872	9.9%	47.256	1,336.125	863.500	599,653
5.0%	33.583	949.543	613.663	426,155	10.0%	47.494	1,342.856	867.850	602,674

Velocity and Capacity for 78" RC Pipe

N= 0.013 | A= 33.183 | HR= 1.625

GRA %	VEL. FT/SEC	CAPACITY (CFS)	(MGD)	(GPM)	GRA %	VEL. FT/SEC	CAPACITY (CFS)	(MGD)	(GPM)
0.1%	5.010	166.237	107.434	74,607	5.1%	35.776	1,187.172	767.236	532,803
0.2%	7.085	235.095	151.935	105,511	5.2%	36.125	1,198.754	774.721	538,001
0.3%	8.677	287.931	186.082	129,224	5.3%	36.471	1,210.226	782.135	543,149
0.4%	10.019	332.475	214.869	149,215	5.4%	36.814	1,221.590	789.479	548,249
0.5%	11.202	371.718	240.231	166,827	5.5%	37.153	1,232.849	796.756	553,302
0.6%	12.271	407.197	263.160	182,750	5.6%	37.489	1,244.006	803.966	558,310
0.7%	13.254	439.822	284.245	197,392	5.7%	37.822	1,255.064	811.113	563,273
0.8%	14.170	470.190	303.871	211,021	5.8%	38.153	1,266.025	818.197	568,192
0.9%	15.029	498.712	322.303	223,822	5.9%	38.480	1,276.893	825.220	573,069
1.0%	15.842	525.688	339.738	235,929	6.0%	38.805	1,287.668	832.184	577,906
1.1%	16.615	551.347	356.320	247,444	6.1%	39.127	1,298.355	839.090	582,702
1.2%	17.354	575.863	372.164	258,447	6.2%	39.446	1,308.954	845.940	587,458
1.3%	18.063	599.377	387.361	269,000	6.3%	39.763	1,319.467	852.735	592,177
1.4%	18.745	622.003	401.983	279,155	6.4%	40.078	1,329.898	859.476	596,858
1.5%	19.402	643.834	416.092	288,953	6.5%	40.390	1,340.248	866.165	601,503
1.6%	20.039	664.949	429.738	298,429	6.6%	40.699	1,350.518	872.802	606,112
1.7%	20.656	685.414	442.964	307,614	6.7%	41.006	1,360.711	879.389	610,687
1.8%	21.254	705.285	455.806	316,532	6.8%	41.311	1,370.828	885.928	615,227
1.9%	21.837	724.611	468.296	325,206	6.9%	41.614	1,380.871	892.418	619,735
2.0%	22.404	743.436	480.462	333,654	7.0%	41.914	1,390.841	898.862	624,209
2.1%	22.957	761.795	492.327	341,894	7.1%	42.212	1,400.740	905.259	628,652
2.2%	23.498	779.722	503.912	349,939	7.2%	42.509	1,410.570	911.612	633,064
2.3%	24.026	797.246	515.238	357,804	7.3%	42.803	1,420.332	917.921	637,445
2.4%	24.542	814.393	526.319	365,500	7.4%	43.095	1,430.027	924.187	641,796
2.5%	25.049	831.186	537.172	373,036	7.5%	43.385	1,439.657	930.410	646,118
2.6%	25.545	847.647	547.811	380,424	7.6%	43.674	1,449.223	936.592	650,411
2.7%	26.031	863.794	558.246	387,671	7.7%	43.960	1,458.726	942.734	654,676
2.8%	26.509	879.645	568.490	394,785	7.8%	44.244	1,468.168	948.836	658,914
2.9%	26.978	895.215	578.552	401,773	7.9%	44.527	1,477.549	954.899	663,124
3.0%	27.439	910.519	588.443	408,641	8.0%	44.808	1,486.871	960.923	667,308
3.1%	27.893	925.570	598.170	415,396	8.1%	45.087	1,496.136	966.910	671,466
3.2%	28.339	940.380	607.741	422,043	8.2%	45.365	1,505.343	972.861	675,598
3.3%	28.779	954.960	617.164	428,586	8.3%	45.641	1,514.494	978.775	679,705
3.4%	29.211	969.322	626.445	435,032	8.4%	45.915	1,523.590	984.653	683,787
3.5%	29.638	983.473	635.591	441,383	8.5%	46.187	1,532.632	990.497	687,845
3.6%	30.058	997.424	644.607	447,644	8.6%	46.458	1,541.621	996.307	691,880
3.7%	30.473	1,011.182	653.499	453,818	8.7%	46.727	1,550.558	1,002.082	695,890
3.8%	30.882	1,024.755	662.271	459,910	8.8%	46.995	1,559.444	1,007.825	699,878
3.9%	31.286	1,038.151	670.928	465,922	8.9%	47.261	1,568.279	1,013.535	703,844
4.0%	31.684	1,051.377	679.475	471,858	9.0%	47.526	1,577.065	1,019.213	707,787
4.1%	32.078	1,064.438	687.916	477,720	9.1%	47.790	1,585.803	1,024.860	711,708
4.2%	32.467	1,077.341	696.255	483,511	9.2%	48.051	1,594.492	1,030.476	715,608
4.3%	32.851	1,090.091	704.495	489,233	9.3%	48.312	1,603.134	1,036.061	719,487
4.4%	33.231	1,102.693	712.640	494,889	9.4%	48.571	1,611.730	1,041.616	723,345
4.5%	33.606	1,115.154	720.693	500,481	9.5%	48.829	1,620.281	1,047.142	727,182
4.6%	33.977	1,127.476	728.656	506,011	9.6%	49.085	1,628.786	1,052.639	730,999
4.7%	34.345	1,139.665	736.534	511,482	9.7%	49.340	1,637.247	1,058.107	734,797
4.8%	34.708	1,151.726	744.328	516,894	9.8%	49.594	1,645.665	1,063.547	738,574
4.9%	35.068	1,163.661	752.041	522,251	9.9%	49.846	1,654.040	1,068.960	742,333
5.0%	35.424	1,175.475	759.677	527,553	10.0%	50.097	1,662.373	1,074.345	746,073

Velocity and Capacity for 84" RC Pipe

N= 0.013 | A= 38.485 | HR= 1.750

GRA %	VEL. FT/SEC	CAPACITY (CFS)	(MGD)	(GPM)	GRA %	VEL. FT/SEC	CAPACITY (CFS)	(MGD)	(GPM)
0.1%	5.263	202.560	130.909	90,909	5.1%	37.588	1,446.570	934.877	649,220
0.2%	7.444	286.463	185.133	128,565	5.2%	37.955	1,460.683	943.998	655,554
0.3%	9.117	350.845	226.741	157,459	5.3%	38.318	1,474.661	953.032	661,828
0.4%	10.527	405.121	261.818	181,818	5.4%	38.678	1,488.508	961.981	668,042
0.5%	11.769	452.939	292.721	203,279	5.5%	39.035	1,502.227	970.847	674,200
0.6%	12.893	496.169	320.660	222,681	5.6%	39.388	1,515.822	979.633	680,301
0.7%	13.926	535.924	346.353	240,523	5.7%	39.738	1,529.296	988.341	686,348
0.8%	14.887	572.927	370.267	257,130	5.8%	40.085	1,542.653	996.973	692,343
0.9%	15.790	607.681	392.727	272,727	5.9%	40.429	1,555.895	1,005.531	698,286
1.0%	16.644	640.552	413.971	287,480	6.0%	40.770	1,569.025	1,014.017	704,178
1.1%	17.457	671.816	434.176	301,511	6.1%	41.109	1,582.046	1,022.432	710,022
1.2%	18.233	701.689	453.482	314,918	6.2%	41.444	1,594.961	1,030.779	715,819
1.3%	18.978	730.341	471.999	327,777	6.3%	41.777	1,607.772	1,039.058	721,568
1.4%	19.694	757.911	489.817	340,150	6.4%	42.107	1,620.482	1,047.272	727,272
1.5%	20.385	784.513	507.008	352,089	6.5%	42.435	1,633.093	1,055.422	732,932
1.6%	21.054	810.241	523.636	363,636	6.6%	42.760	1,645.607	1,063.510	738,549
1.7%	21.702	835.177	539.752	374,828	6.7%	43.083	1,658.027	1,071.537	744,123
1.8%	22.331	859.390	555.400	385,694	6.8%	43.403	1,670.355	1,079.503	749,655
1.9%	22.943	882.940	570.619	396,263	6.9%	43.721	1,682.592	1,087.412	755,147
2.0%	23.539	905.877	585.443	406,558	7.0%	44.037	1,694.741	1,095.263	760,600
2.1%	24.120	928.248	599.901	416,598	7.1%	44.350	1,706.803	1,103.059	766,013
2.2%	24.688	950.092	614.018	426,401	7.2%	44.662	1,718.781	1,110.800	771,389
2.3%	25.242	971.445	627.818	435,984	7.3%	44.971	1,730.676	1,118.487	776,727
2.4%	25.785	992.339	641.321	445,362	7.4%	45.278	1,742.489	1,126.122	782,029
2.5%	26.317	1,012.801	654.545	454,545	7.5%	45.583	1,754.223	1,133.705	787,295
2.6%	26.838	1,032.859	667.508	463,547	7.6%	45.885	1,765.879	1,141.238	792,527
2.7%	27.350	1,052.534	680.223	472,377	7.7%	46.186	1,777.459	1,148.722	797,724
2.8%	27.851	1,071.848	692.705	481,045	7.8%	46.485	1,788.964	1,156.157	802,887
2.9%	28.344	1,090.820	704.967	489,560	7.9%	46.782	1,800.395	1,163.545	808,017
3.0%	28.829	1,109.468	717.018	497,929	8.0%	47.077	1,811.754	1,170.886	813,115
3.1%	29.305	1,127.808	728.871	506,160	8.1%	47.371	1,823.042	1,178.181	818,181
3.2%	29.774	1,145.854	740.533	514,259	8.2%	47.662	1,834.261	1,185.432	823,216
3.3%	30.236	1,163.620	752.015	522,233	8.3%	47.952	1,845.412	1,192.638	828,221
3.4%	30.691	1,181.119	763.324	530,086	8.4%	48.240	1,856.495	1,199.801	833,195
3.5%	31.139	1,198.363	774.468	537,825	8.5%	48.526	1,867.513	1,206.922	838,140
3.6%	31.581	1,215.362	785.454	545,454	8.6%	48.811	1,878.467	1,214.000	843,056
3.7%	32.016	1,232.126	796.289	552,978	8.7%	49.094	1,889.356	1,221.038	847,943
3.8%	32.446	1,248.665	806.977	560,401	8.8%	49.375	1,900.184	1,228.035	852,802
3.9%	32.870	1,264.988	817.527	567,727	8.9%	49.655	1,910.950	1,234.993	857,634
4.0%	33.289	1,281.104	827.941	574,959	9.0%	49.933	1,921.655	1,241.912	862,439
4.1%	33.702	1,297.019	838.227	582,102	9.1%	50.210	1,932.302	1,248.792	867,217
4.2%	34.111	1,312.741	848.387	589,158	9.2%	50.485	1,942.890	1,255.635	871,969
4.3%	34.515	1,328.276	858.428	596,130	9.3%	50.759	1,953.420	1,262.441	876,695
4.4%	34.914	1,343.633	868.352	603,022	9.4%	51.031	1,963.895	1,269.210	881,396
4.5%	35.308	1,358.816	878.164	609,836	9.5%	51.302	1,974.313	1,275.943	886,072
4.6%	35.698	1,373.831	887.868	616,575	9.6%	51.571	1,984.677	1,282.641	890,723
4.7%	36.084	1,388.683	897.467	623,241	9.7%	51.839	1,994.987	1,289.304	895,350
4.8%	36.466	1,403.379	906.964	629,836	9.8%	52.105	2,005.244	1,295.933	899,954
4.9%	36.844	1,417.922	916.363	636,363	9.9%	52.370	2,015.449	1,302.528	904,534
5.0%	37.218	1,432.317	925.667	642,824	10.0%	52.634	2,025.603	1,309.090	909,090

Velocity and Capacity for 90" RC Pipe

N= 0.013 | A= 44.179 | HR= 1.875

GRA %	VEL. FT/SEC	CAPACITY (CFS)	(MGD)	(GPM)	GRA %	VEL. FT/SEC	CAPACITY (CFS)	(MGD)	(GPM)
0.1%	5.511	243.476	157.352	109,272	5.1%	39.358	1,738.766	1,123.716	780,358
0.2%	7.794	344.327	222.529	154,534	5.2%	39.742	1,755.730	1,134.679	787,972
0.3%	9.546	421.713	272.541	189,265	5.3%	40.122	1,772.532	1,145.538	795,512
0.4%	11.022	486.952	314.703	218,544	5.4%	40.499	1,789.176	1,156.294	802,982
0.5%	12.323	544.429	351.849	244,340	5.5%	40.872	1,805.666	1,166.952	810,383
0.6%	13.500	596.392	385.431	267,661	5.6%	41.242	1,822.008	1,177.513	817,717
0.7%	14.581	644.177	416.314	289,107	5.7%	41.608	1,838.204	1,187.979	824,986
0.8%	15.588	688.654	445.058	309,068	5.8%	41.972	1,854.258	1,198.355	832,191
0.9%	16.534	730.428	472.055	327,816	5.9%	42.332	1,870.175	1,208.642	839,334
1.0%	17.428	769.939	497.590	345,549	6.0%	42.689	1,885.957	1,218.841	846,418
1.1%	18.278	807.519	521.877	362,414	6.1%	43.044	1,901.608	1,228.956	853,442
1.2%	19.091	843.426	545.082	378,529	6.2%	43.395	1,917.132	1,238.989	860,409
1.3%	19.871	877.865	567.340	393,986	6.3%	43.744	1,932.531	1,248.941	867,320
1.4%	20.621	911.004	588.756	408,859	6.4%	44.089	1,947.808	1,258.814	874,176
1.5%	21.345	942.979	609.421	423,209	6.5%	44.432	1,962.966	1,268.610	880,979
1.6%	22.045	973.904	629.407	437,088	6.6%	44.773	1,978.008	1,278.331	887,730
1.7%	22.723	1,003.877	648.778	450,540	6.7%	45.111	1,992.937	1,287.979	894,430
1.8%	23.382	1,032.981	667.587	463,602	6.8%	45.446	2,007.755	1,297.556	901,080
1.9%	24.023	1,061.287	685.880	476,306	6.9%	45.779	2,022.464	1,307.062	907,682
2.0%	24.647	1,088.858	703.698	488,679	7.0%	46.110	2,037.066	1,316.499	914,235
2.1%	25.255	1,115.747	721.076	500,747	7.1%	46.438	2,051.565	1,325.869	920,743
2.2%	25.850	1,142.004	738.045	512,531	7.2%	46.764	2,065.962	1,335.174	927,204
2.3%	26.431	1,167.670	754.632	524,050	7.3%	47.087	2,080.260	1,344.414	933,621
2.4%	26.999	1,192.784	770.863	535,321	7.4%	47.409	2,094.460	1,353.591	939,994
2.5%	27.556	1,217.380	786.759	546,360	7.5%	47.728	2,108.564	1,362.706	946,324
2.6%	28.102	1,241.489	802.340	557,180	7.6%	48.045	2,122.575	1,371.761	952,611
2.7%	28.637	1,265.138	817.624	567,794	7.7%	48.360	2,136.493	1,380.756	958,858
2.8%	29.162	1,288.354	832.627	578,213	7.8%	48.673	2,150.322	1,389.693	965,064
2.9%	29.679	1,311.158	847.365	588,448	7.9%	48.984	2,164.062	1,398.573	971,231
3.0%	30.186	1,333.573	861.851	598,508	8.0%	49.293	2,177.716	1,407.397	977,359
3.1%	30.685	1,355.617	876.097	608,401	8.1%	49.601	2,191.284	1,416.166	983,448
3.2%	31.176	1,377.308	890.116	618,136	8.2%	49.906	2,204.769	1,424.880	989,500
3.3%	31.659	1,398.663	903.917	627,720	8.3%	50.209	2,218.172	1,433.542	995,516
3.4%	32.135	1,419.697	917.510	637,160	8.4%	50.511	2,231.494	1,442.152	1,001,495
3.5%	32.605	1,440.423	930.905	646,462	8.5%	50.810	2,244.738	1,450.711	1,007,438
3.6%	33.067	1,460.856	944.110	655,632	8.6%	51.108	2,257.904	1,459.220	1,013,347
3.7%	33.523	1,481.007	957.133	664,676	8.7%	51.405	2,270.993	1,467.679	1,019,222
3.8%	33.973	1,500.887	969.981	673,598	8.8%	51.699	2,284.007	1,476.090	1,025,063
3.9%	34.417	1,520.507	982.661	682,404	8.9%	51.992	2,296.948	1,484.453	1,030,870
4.0%	34.856	1,539.877	995.180	691,097	9.0%	52.284	2,309.816	1,492.770	1,036,646
4.1%	35.289	1,559.007	1,007.543	699,682	9.1%	52.573	2,322.613	1,501.040	1,042,389
4.2%	35.716	1,577.905	1,019.756	708,164	9.2%	52.861	2,335.340	1,509.265	1,048,101
4.3%	36.139	1,596.579	1,031.824	716,545	9.3%	53.148	2,347.998	1,517.445	1,053,781
4.4%	36.557	1,615.037	1,043.753	724,829	9.4%	53.433	2,360.587	1,525.582	1,059,432
4.5%	36.970	1,633.287	1,055.547	733,019	9.5%	53.716	2,373.111	1,533.675	1,065,052
4.6%	37.379	1,651.335	1,067.211	741,119	9.6%	53.998	2,385.568	1,541.726	1,070,643
4.7%	37.783	1,669.187	1,078.749	749,131	9.7%	54.279	2,397.961	1,549.735	1,076,205
4.8%	38.183	1,686.851	1,090.165	757,059	9.8%	54.558	2,410.290	1,557.703	1,081,738
4.9%	38.578	1,704.332	1,101.462	764,904	9.9%	54.835	2,422.556	1,565.630	1,087,243
5.0%	38.970	1,721.635	1,112.645	772,670	10.0%	55.112	2,434.760	1,573.517	1,092,720

Velocity and Capacity for 96" RC Pipe

N= 0.013 | A= 50.265 | HR= 2.000

GRA %	VEL. FT/SEC	CAPACITY (CFS)	(MGD)	(GPM)	GRA %	VEL. FT/SEC	CAPACITY (CFS)	(MGD)	(GPM)
0.1%	5.753	289.201	186.902	129,793	5.1%	41.088	2,065.307	1,334.750	926,910
0.2%	8.137	408.992	264.320	183,555	5.2%	41.489	2,085.456	1,347.772	935,953
0.3%	9.965	500.910	323.724	224,809	5.3%	41.886	2,105.413	1,360.670	944,910
0.4%	11.507	578.402	373.805	259,587	5.4%	42.279	2,125.183	1,373.446	953,782
0.5%	12.865	646.673	417.926	290,227	5.5%	42.669	2,144.770	1,386.105	962,573
0.6%	14.093	708.394	457.815	317,927	5.6%	43.055	2,164.180	1,398.649	971,284
0.7%	15.222	765.153	494.497	343,401	5.7%	43.438	2,183.418	1,411.082	979,918
0.8%	16.273	817.983	528.640	367,111	5.8%	43.817	2,202.487	1,423.406	988,476
0.9%	17.260	867.602	560.707	389,380	5.9%	44.193	2,221.393	1,435.624	996,961
1.0%	18.194	914.533	591.037	410,442	6.0%	44.566	2,240.139	1,447.739	1,005,375
1.1%	19.082	959.170	619.885	430,476	6.1%	44.936	2,258.730	1,459.754	1,013,718
1.2%	19.931	1,001.821	647.449	449,617	6.2%	45.303	2,277.169	1,471.671	1,021,993
1.3%	20.744	1,042.728	673.886	467,976	6.3%	45.667	2,295.460	1,483.491	1,030,202
1.4%	21.527	1,082.090	699.325	485,642	6.4%	46.028	2,313.606	1,495.219	1,038,346
1.5%	22.283	1,120.070	723.870	502,687	6.5%	46.386	2,331.611	1,506.855	1,046,427
1.6%	23.014	1,156.803	747.609	519,173	6.6%	46.741	2,349.478	1,518.402	1,054,446
1.7%	23.722	1,192.405	770.618	535,151	6.7%	47.094	2,367.210	1,529.862	1,062,404
1.8%	24.410	1,226.975	792.960	550,666	6.8%	47.444	2,384.811	1,541.236	1,070,303
1.9%	25.079	1,260.597	814.688	565,756	6.9%	47.792	2,402.282	1,552.528	1,078,144
2.0%	25.730	1,293.345	835.853	580,453	7.0%	48.137	2,419.627	1,563.737	1,085,929
2.1%	26.366	1,325.284	856.494	594,788	7.1%	48.480	2,436.849	1,574.867	1,093,658
2.2%	26.986	1,356.472	876.650	608,785	7.2%	48.820	2,453.950	1,585.919	1,101,333
2.3%	27.593	1,386.958	896.352	622,467	7.3%	49.158	2,470.932	1,596.894	1,108,954
2.4%	28.186	1,416.789	915.631	635,855	7.4%	49.493	2,487.799	1,607.795	1,116,524
2.5%	28.767	1,446.004	934.512	648,967	7.5%	49.826	2,504.552	1,618.622	1,124,043
2.6%	29.337	1,474.640	953.019	661,819	7.6%	50.158	2,521.194	1,629.377	1,131,512
2.7%	29.896	1,502.731	971.173	674,426	7.7%	50.486	2,537.726	1,640.062	1,138,932
2.8%	30.444	1,530.307	988.994	686,802	7.8%	50.813	2,554.152	1,650.677	1,146,303
2.9%	30.983	1,557.394	1,006.500	698,958	7.9%	51.138	2,570.473	1,661.224	1,153,628
3.0%	31.513	1,584.018	1,023.706	710,907	8.0%	51.461	2,586.690	1,671.705	1,160,907
3.1%	32.034	1,610.202	1,040.628	722,659	8.1%	51.781	2,602.807	1,682.121	1,168,140
3.2%	32.547	1,635.967	1,057.279	734,222	8.2%	52.100	2,618.824	1,692.473	1,175,328
3.3%	33.051	1,661.332	1,073.672	745,606	8.3%	52.417	2,634.744	1,702.761	1,182,473
3.4%	33.548	1,686.316	1,089.819	756,819	8.4%	52.731	2,650.569	1,712.988	1,189,575
3.5%	34.038	1,710.935	1,105.729	767,868	8.5%	53.044	2,666.299	1,723.155	1,196,635
3.6%	34.521	1,735.205	1,121.414	778,760	8.6%	53.355	2,681.938	1,733.261	1,203,654
3.7%	34.997	1,759.140	1,136.883	789,502	8.7%	53.665	2,697.485	1,743.309	1,210,631
3.8%	35.467	1,782.753	1,152.143	800,100	8.8%	53.972	2,712.944	1,753.300	1,217,569
3.9%	35.930	1,806.058	1,167.205	810,559	8.9%	54.278	2,728.315	1,763.233	1,224,468
4.0%	36.388	1,829.066	1,182.074	820,885	9.0%	54.582	2,743.599	1,773.111	1,231,327
4.1%	36.840	1,851.788	1,196.759	831,083	9.1%	54.885	2,758.799	1,782.935	1,238,149
4.2%	37.287	1,874.235	1,211.266	841,157	9.2%	55.185	2,773.916	1,792.704	1,244,934
4.3%	37.728	1,896.416	1,225.601	851,112	9.3%	55.484	2,788.951	1,802.421	1,251,681
4.4%	38.164	1,918.341	1,239.770	860,951	9.4%	55.782	2,803.905	1,812.086	1,258,393
4.5%	38.595	1,940.018	1,253.779	870,680	9.5%	56.078	2,818.780	1,821.699	1,265,069
4.6%	39.022	1,961.455	1,267.633	880,301	9.6%	56.372	2,833.577	1,831.262	1,271,709
4.7%	39.444	1,982.661	1,281.338	889,818	9.7%	56.665	2,848.297	1,840.775	1,278,316
4.8%	39.861	2,003.642	1,294.898	899,234	9.8%	56.956	2,862.941	1,850.239	1,284,888
4.9%	40.274	2,024.405	1,308.316	908,553	9.9%	57.246	2,877.511	1,859.655	1,291,427
5.0%	40.683	2,044.958	1,321.599	917,777	10.0%	57.535	2,892.008	1,869.024	1,297,933

Velocity and Capacity for 102" RC Pipe

N= 0.013 | A= 56.745 | HR= 2.125

GRA %	VEL. FT/SEC	CAPACITY (CFS)	(MGD)	(GPM)	GRA %	VEL. FT/SEC	CAPACITY (CFS)	(MGD)	(GPM)
0.1%	5.991	339.946	219.698	152,568	5.1%	42.783	2,427.700	1,568.955	1,089,552
0.2%	8.472	480.756	310.699	215,763	5.2%	43.200	2,451.385	1,584.262	1,100,182
0.3%	10.376	588.804	380.527	264,255	5.3%	43.613	2,474.844	1,599.423	1,110,710
0.4%	11.982	679.892	439.395	305,136	5.4%	44.023	2,498.083	1,614.441	1,121,140
0.5%	13.396	760.142	491.259	341,152	5.5%	44.429	2,521.107	1,629.321	1,131,473
0.6%	14.674	832.694	538.147	373,713	5.6%	44.831	2,543.923	1,644.066	1,141,713
0.7%	15.850	899.413	581.265	403,656	5.7%	45.229	2,566.536	1,658.680	1,151,861
0.8%	16.944	961.512	621.399	431,527	5.8%	45.624	2,588.952	1,673.167	1,161,921
0.9%	17.972	1,019.838	659.093	457,703	5.9%	46.016	2,611.175	1,687.529	1,171,895
1.0%	18.944	1,075.004	694.745	482,462	6.0%	46.404	2,633.210	1,701.770	1,181,785
1.1%	19.869	1,127.473	728.654	506,010	6.1%	46.789	2,655.063	1,715.893	1,191,592
1.2%	20.753	1,177.607	761.055	528,510	6.2%	47.171	2,676.737	1,729.900	1,201,320
1.3%	21.600	1,225.693	792.131	550,091	6.3%	47.550	2,698.238	1,743.796	1,210,969
1.4%	22.415	1,271.961	822.033	570,856	6.4%	47.926	2,719.568	1,757.581	1,220,542
1.5%	23.202	1,316.605	850.885	590,892	6.5%	48.299	2,740.732	1,771.259	1,230,041
1.6%	23.963	1,359.784	878.790	610,271	6.6%	48.669	2,761.734	1,784.832	1,239,466
1.7%	24.701	1,401.633	905.836	629,053	6.7%	49.037	2,782.578	1,798.302	1,248,821
1.8%	25.417	1,442.269	932.098	647,290	6.8%	49.401	2,803.267	1,811.673	1,258,106
1.9%	26.113	1,481.790	957.640	665,027	6.9%	49.763	2,823.804	1,824.945	1,267,323
2.0%	26.792	1,520.285	982.517	682,304	7.0%	50.122	2,844.192	1,838.122	1,276,474
2.1%	27.453	1,557.828	1,006.781	699,153	7.1%	50.479	2,864.436	1,851.205	1,285,559
2.2%	28.099	1,594.488	1,030.473	715,606	7.2%	50.833	2,884.537	1,864.196	1,294,580
2.3%	28.731	1,630.324	1,053.633	731,689	7.3%	51.185	2,904.500	1,877.097	1,303,540
2.4%	29.349	1,665.388	1,076.294	747,426	7.4%	51.534	2,924.326	1,889.910	1,312,438
2.5%	29.954	1,699.730	1,098.488	762,839	7.5%	51.882	2,944.019	1,902.637	1,321,276
2.6%	30.547	1,733.391	1,120.242	777,946	7.6%	52.226	2,963.581	1,915.279	1,330,055
2.7%	31.129	1,766.411	1,141.582	792,765	7.7%	52.569	2,983.014	1,927.838	1,338,777
2.8%	31.700	1,798.825	1,162.530	807,313	7.8%	52.909	3,002.322	1,940.317	1,347,442
2.9%	32.261	1,830.665	1,183.108	821,603	7.9%	53.247	3,021.506	1,952.715	1,356,052
3.0%	32.813	1,861.961	1,203.333	835,648	8.0%	53.583	3,040.569	1,965.035	1,364,608
3.1%	33.355	1,892.739	1,223.224	849,461	8.1%	53.917	3,059.514	1,977.278	1,373,110
3.2%	33.889	1,923.025	1,242.797	863,054	8.2%	54.249	3,078.342	1,989.446	1,381,560
3.3%	34.414	1,952.841	1,262.067	876,435	8.3%	54.578	3,097.055	2,001.540	1,389,958
3.4%	34.932	1,982.209	1,281.046	889,615	8.4%	54.906	3,115.657	2,013.562	1,398,307
3.5%	35.442	2,011.148	1,299.748	902,603	8.5%	55.232	3,134.147	2,025.512	1,406,605
3.6%	35.945	2,039.676	1,318.185	915,407	8.6%	55.556	3,152.530	2,037.392	1,414,855
3.7%	36.440	2,067.811	1,336.368	928,033	8.7%	55.878	3,170.805	2,049.203	1,423,057
3.8%	36.930	2,095.568	1,354.307	940,491	8.8%	56.198	3,188.976	2,060.946	1,431,213
3.9%	37.412	2,122.962	1,372.011	952,785	8.9%	56.517	3,207.044	2,072.623	1,439,321
4.0%	37.889	2,150.007	1,389.490	964,923	9.0%	56.833	3,225.011	2,084.234	1,447,385
4.1%	38.360	2,176.716	1,406.751	976,910	9.1%	57.148	3,242.878	2,095.781	1,455,404
4.2%	38.825	2,203.102	1,423.803	988,752	9.2%	57.461	3,260.648	2,107.265	1,463,379
4.3%	39.284	2,229.175	1,440.653	1,000,454	9.3%	57.773	3,278.321	2,118.687	1,471,310
4.4%	39.738	2,254.947	1,457.309	1,012,020	9.4%	58.083	3,295.899	2,130.047	1,479,199
4.5%	40.187	2,280.427	1,473.776	1,023,456	9.5%	58.391	3,313.384	2,141.347	1,487,047
4.6%	40.631	2,305.626	1,490.062	1,034,765	9.6%	58.697	3,330.777	2,152.588	1,494,853
4.7%	41.071	2,330.552	1,506.171	1,045,952	9.7%	59.002	3,348.080	2,163.770	1,502,618
4.8%	41.505	2,355.215	1,522.110	1,057,020	9.8%	59.306	3,365.294	2,174.895	1,510,344
4.9%	41.935	2,379.622	1,537.883	1,067,974	9.9%	59.607	3,382.420	2,185.963	1,518,030
5.0%	42.361	2,403.781	1,553.497	1,078,817	10.0%	59.908	3,399.460	2,196.976	1,525,678

Velocity and Capacity for 108" RC Pipe

N= 0.013 | A= 63.617 | HR= 2.250

GRA %	VEL. FT/SEC	CAPACITY (CFS)	(MGD)	(GPM)	GRA %	VEL. FT/SEC	CAPACITY (CFS)	(MGD)	(GPM)
0.1%	6.223	395.919	255.871	177,688	5.1%	44.444	2,827.426	1,827.286	1,268,949
0.2%	8.801	559.914	361.857	251,289	5.2%	44.878	2,855.011	1,845.114	1,281,329
0.3%	10.779	685.752	443.182	307,765	5.3%	45.307	2,882.333	1,862.771	1,293,591
0.4%	12.447	791.838	511.743	355,377	5.4%	45.733	2,909.397	1,880.262	1,305,738
0.5%	13.916	885.301	572.146	397,323	5.5%	46.154	2,936.213	1,897.592	1,317,772
0.6%	15.244	969.799	626.754	435,246	5.6%	46.572	2,962.785	1,914.765	1,329,698
0.7%	16.466	1,047.503	676.972	470,119	5.7%	46.986	2,989.122	1,931.786	1,341,518
0.8%	17.603	1,119.828	723.713	502,579	5.8%	47.396	3,015.228	1,948.657	1,353,234
0.9%	18.670	1,187.757	767.614	533,065	5.9%	47.803	3,041.110	1,965.384	1,364,850
1.0%	19.680	1,252.005	809.136	561,900	6.0%	48.207	3,066.774	1,981.970	1,376,368
1.1%	20.641	1,313.114	848.629	589,326	6.1%	48.607	3,092.225	1,998.418	1,387,791
1.2%	21.559	1,371.503	886.364	615,531	6.2%	49.004	3,117.468	2,014.732	1,399,120
1.3%	22.439	1,427.506	922.557	640,665	6.3%	49.397	3,142.508	2,030.915	1,410,358
1.4%	23.286	1,481.393	957.383	664,849	6.4%	49.788	3,167.351	2,046.970	1,421,507
1.5%	24.103	1,533.387	990.985	688,184	6.5%	50.175	3,192.000	2,062.900	1,432,569
1.6%	24.894	1,583.675	1,023.485	710,753	6.6%	50.560	3,216.460	2,078.708	1,443,547
1.7%	25.660	1,632.415	1,054.984	732,628	6.7%	50.941	3,240.735	2,094.397	1,454,442
1.8%	26.404	1,679.741	1,085.570	753,868	6.8%	51.320	3,264.830	2,109.968	1,465,256
1.9%	27.127	1,725.770	1,115.317	774,526	6.9%	51.696	3,288.749	2,125.426	1,475,990
2.0%	27.832	1,770.603	1,144.291	794,647	7.0%	52.069	3,312.495	2,140.773	1,486,648
2.1%	28.519	1,814.328	1,172.549	814,270	7.1%	52.440	3,336.071	2,156.010	1,497,229
2.2%	29.191	1,857.024	1,200.143	833,432	7.2%	52.808	3,359.483	2,171.140	1,507,736
2.3%	29.847	1,898.760	1,227.115	852,163	7.3%	53.173	3,382.732	2,186.165	1,518,170
2.4%	30.489	1,939.598	1,253.508	870,492	7.4%	53.536	3,405.823	2,201.088	1,528,533
2.5%	31.117	1,979.594	1,279.356	888,442	7.5%	53.897	3,428.758	2,215.910	1,538,826
2.6%	31.733	2,018.798	1,304.693	906,036	7.6%	54.255	3,451.540	2,230.634	1,549,051
2.7%	32.338	2,057.255	1,329.546	923,296	7.7%	54.611	3,474.174	2,245.261	1,559,209
2.8%	32.931	2,095.006	1,353.943	940,238	7.8%	54.964	3,496.660	2,259.794	1,569,301
2.9%	33.514	2,132.088	1,377.909	956,881	7.9%	55.315	3,519.004	2,274.233	1,579,329
3.0%	34.087	2,168.537	1,401.465	973,239	8.0%	55.664	3,541.206	2,288.582	1,589,293
3.1%	34.651	2,204.383	1,424.631	989,327	8.1%	56.011	3,563.270	2,302.841	1,599,195
3.2%	35.205	2,239.655	1,447.426	1,005,157	8.2%	56.356	3,585.198	2,317.013	1,609,037
3.3%	35.751	2,274.381	1,469.868	1,020,742	8.3%	56.698	3,606.992	2,331.098	1,618,818
3.4%	36.289	2,308.584	1,491.973	1,036,092	8.4%	57.039	3,628.656	2,345.099	1,628,541
3.5%	36.818	2,342.287	1,513.755	1,051,219	8.5%	57.377	3,650.191	2,359.016	1,638,206
3.6%	37.341	2,375.513	1,535.228	1,066,130	8.6%	57.714	3,671.600	2,372.852	1,647,814
3.7%	37.856	2,408.280	1,556.404	1,080,836	8.7%	58.048	3,692.885	2,386.608	1,657,367
3.8%	38.364	2,440.608	1,577.296	1,095,345	8.8%	58.381	3,714.048	2,400.285	1,666,865
3.9%	38.865	2,472.512	1,597.915	1,109,664	8.9%	58.712	3,735.091	2,413.885	1,676,309
4.0%	39.361	2,504.011	1,618.272	1,123,800	9.0%	59.041	3,756.016	2,427.408	1,685,700
4.1%	39.850	2,535.117	1,638.375	1,137,761	9.1%	59.368	3,776.825	2,440.856	1,695,039
4.2%	40.333	2,565.847	1,658.235	1,151,552	9.2%	59.693	3,797.520	2,454.231	1,704,327
4.3%	40.810	2,596.213	1,677.860	1,165,181	9.3%	60.017	3,818.103	2,467.533	1,713,565
4.4%	41.282	2,626.228	1,697.258	1,178,651	9.4%	60.339	3,838.576	2,480.764	1,722,753
4.5%	41.748	2,655.904	1,716.437	1,191,970	9.5%	60.659	3,858.939	2,493.925	1,731,892
4.6%	42.209	2,685.252	1,735.403	1,205,141	9.6%	60.977	3,879.196	2,507.016	1,740,983
4.7%	42.666	2,714.283	1,754.165	1,218,170	9.7%	61.294	3,899.348	2,520.040	1,750,028
4.8%	43.117	2,743.006	1,772.728	1,231,061	9.8%	61.609	3,919.396	2,532.996	1,759,025
4.9%	43.564	2,771.432	1,791.099	1,243,819	9.9%	61.923	3,939.343	2,545.887	1,767,977
5.0%	44.006	2,799.569	1,809.283	1,256,447	10.0%	62.235	3,959.188	2,558.713	1,776,884

Velocity and Capacity for 114" RC Pipe

N= 0.013 | A= 70.882 | HR= 2.375

GRA %	VEL. FT/SEC	CAPACITY (CFS)	(MGD)	(GPM)	GRA %	VEL. FT/SEC	CAPACITY (CFS)	(MGD)	(GPM)
0.1%	6.452	457.322	295.555	205,246	5.1%	46.076	3,265.935	2,110.682	1,465,752
0.2%	9.124	646.751	417.977	290,262	5.2%	46.525	3,297.798	2,131.275	1,480,052
0.3%	11.175	792.106	511.916	355,497	5.3%	46.970	3,329.357	2,151.670	1,494,215
0.4%	12.904	914.645	591.109	410,493	5.4%	47.411	3,360.619	2,171.874	1,508,246
0.5%	14.427	1,022.604	660.880	458,945	5.5%	47.848	3,391.593	2,191.892	1,522,147
0.6%	15.804	1,120.206	723.958	502,749	5.6%	48.281	3,422.287	2,211.728	1,535,922
0.7%	17.070	1,209.961	781.964	543,031	5.7%	48.711	3,452.708	2,231.388	1,549,575
0.8%	18.249	1,293.503	835.955	580,524	5.8%	49.136	3,482.863	2,250.877	1,563,109
0.9%	19.356	1,371.967	886.664	615,739	5.9%	49.558	3,512.760	2,270.198	1,576,526
1.0%	20.403	1,446.180	934.626	649,046	6.0%	49.976	3,542.404	2,289.356	1,589,831
1.1%	21.398	1,516.767	980.244	680,725	6.1%	50.391	3,571.802	2,308.355	1,603,025
1.2%	22.350	1,584.211	1,023.831	710,994	6.2%	50.802	3,600.960	2,327.199	1,616,111
1.3%	23.263	1,648.899	1,065.637	740,026	6.3%	51.210	3,629.884	2,345.892	1,629,092
1.4%	24.141	1,711.144	1,105.864	767,961	6.4%	51.615	3,658.579	2,364.437	1,641,970
1.5%	24.988	1,771.202	1,144.678	794,915	6.5%	52.017	3,687.051	2,382.838	1,654,748
1.6%	25.807	1,829.289	1,182.218	820,985	6.6%	52.415	3,715.304	2,401.097	1,667,429
1.7%	26.602	1,885.588	1,218.603	846,252	6.7%	52.811	3,743.345	2,419.219	1,680,013
1.8%	27.373	1,940.254	1,253.932	870,786	6.8%	53.203	3,771.177	2,437.206	1,692,504
1.9%	28.123	1,993.422	1,288.293	894,648	6.9%	53.593	3,798.805	2,455.061	1,704,904
2.0%	28.854	2,045.208	1,321.760	917,889	7.0%	53.980	3,826.233	2,472.787	1,717,213
2.1%	29.566	2,095.714	1,354.401	940,557	7.1%	54.364	3,853.467	2,490.388	1,729,436
2.2%	30.262	2,145.032	1,386.274	962,690	7.2%	54.746	3,880.509	2,507.864	1,741,572
2.3%	30.942	2,193.241	1,417.430	984,327	7.3%	55.125	3,907.364	2,525.220	1,753,625
2.4%	31.608	2,240.413	1,447.916	1,005,497	7.4%	55.501	3,934.036	2,542.457	1,765,595
2.5%	32.259	2,286.612	1,477.773	1,026,231	7.5%	55.875	3,960.528	2,559.578	1,777,485
2.6%	32.898	2,331.896	1,507.039	1,046,555	7.6%	56.246	3,986.844	2,576.585	1,789,295
2.7%	33.525	2,376.317	1,535.747	1,066,491	7.7%	56.615	4,012.987	2,593.481	1,801,029
2.8%	34.140	2,419.922	1,563.928	1,086,061	7.8%	56.981	4,038.962	2,610.268	1,812,686
2.9%	34.744	2,462.756	1,591.610	1,105,285	7.9%	57.345	4,064.770	2,626.947	1,824,269
3.0%	35.338	2,504.858	1,618.819	1,124,180	8.0%	57.707	4,090.415	2,643.521	1,835,778
3.1%	35.922	2,546.263	1,645.579	1,142,763	8.1%	58.067	4,115.901	2,659.992	1,847,216
3.2%	36.497	2,587.006	1,671.909	1,161,048	8.2%	58.424	4,141.230	2,676.361	1,858,584
3.3%	37.063	2,627.117	1,697.832	1,179,050	8.3%	58.779	4,166.405	2,692.631	1,869,882
3.4%	37.621	2,666.625	1,723.365	1,196,781	8.4%	59.132	4,191.428	2,708.803	1,881,113
3.5%	38.170	2,705.555	1,748.525	1,214,253	8.5%	59.483	4,216.304	2,724.879	1,892,277
3.6%	38.711	2,743.934	1,773.328	1,231,478	8.6%	59.832	4,241.033	2,740.861	1,903,376
3.7%	39.245	2,781.783	1,797.789	1,248,464	8.7%	60.179	4,265.619	2,756.750	1,914,410
3.8%	39.772	2,819.124	1,821.921	1,265,223	8.8%	60.524	4,290.064	2,772.548	1,925,381
3.9%	40.292	2,855.977	1,845.738	1,281,763	8.9%	60.867	4,314.370	2,788.257	1,936,289
4.0%	40.805	2,892.360	1,869.252	1,298,091	9.0%	61.208	4,338.541	2,803.877	1,947,137
4.1%	41.312	2,928.292	1,892.473	1,314,217	9.1%	61.547	4,362.577	2,819.411	1,957,925
4.2%	41.813	2,963.788	1,915.413	1,330,148	9.2%	61.884	4,386.482	2,834.860	1,968,653
4.3%	42.308	2,998.863	1,938.081	1,345,890	9.3%	62.220	4,410.257	2,850.226	1,979,323
4.4%	42.797	3,033.533	1,960.488	1,361,450	9.4%	62.553	4,433.905	2,865.508	1,989,936
4.5%	43.280	3,067.812	1,982.641	1,376,834	9.5%	62.885	4,457.427	2,880.710	2,000,493
4.6%	43.759	3,101.711	2,004.549	1,392,048	9.6%	63.215	4,480.826	2,895.832	2,010,994
4.7%	44.232	3,135.244	2,026.220	1,407,098	9.7%	63.544	4,504.103	2,910.875	2,021,441
4.8%	44.700	3,168.422	2,047.662	1,421,988	9.8%	63.870	4,527.260	2,925.841	2,031,834
4.9%	45.163	3,201.256	2,068.882	1,436,724	9.9%	64.195	4,550.300	2,940.731	2,042,175
5.0%	45.622	3,233.757	2,089.887	1,451,310	10.0%	64.519	4,573.223	2,955.546	2,052,463

Velocity and Capacity for 120" RC Pipe

N= 0.013 | A= 78.540 | HR= 2.500

GRA %	VEL. FT/SEC	CAPACITY (CFS)	(MGD)	(GPM)	GRA %	VEL. FT/SEC	CAPACITY (CFS)	(MGD)	(GPM)
0.1%	6.676	524.356	338.877	235,331	5.1%	47.678	3,744.650	2,420.062	1,680,599
0.2%	9.442	741.551	479.244	332,808	5.2%	48.144	3,781.184	2,443.673	1,696,995
0.3%	11.564	908.211	586.951	407,605	5.3%	48.604	3,817.368	2,467.058	1,713,235
0.4%	13.353	1,048.712	677.753	470,662	5.4%	49.061	3,853.213	2,490.224	1,729,322
0.5%	14.929	1,172.495	757.751	526,216	5.5%	49.513	3,888.727	2,513.176	1,745,261
0.6%	16.354	1,284.404	830.075	576,441	5.6%	49.961	3,923.920	2,535.920	1,761,055
0.7%	17.664	1,387.315	896.583	622,627	5.7%	50.405	3,958.800	2,558.462	1,776,709
0.8%	18.883	1,483.102	958.488	665,616	5.8%	50.845	3,993.375	2,580.807	1,792,227
0.9%	20.029	1,573.068	1,016.630	705,993	5.9%	51.282	4,027.654	2,602.960	1,807,611
1.0%	21.112	1,658.159	1,071.622	744,182	6.0%	51.714	4,061.643	2,624.926	1,822,865
1.1%	22.143	1,739.092	1,123.926	780,504	6.1%	52.144	4,095.350	2,646.710	1,837,993
1.2%	23.127	1,816.422	1,173.903	815,210	6.2%	52.569	4,128.782	2,668.316	1,852,997
1.3%	24.072	1,890.592	1,221.837	848,498	6.3%	52.992	4,161.946	2,689.749	1,867,881
1.4%	24.980	1,961.960	1,267.960	880,528	6.4%	53.410	4,194.847	2,711.012	1,882,647
1.5%	25.857	2,030.822	1,312.463	911,433	6.5%	53.826	4,227.492	2,732.110	1,897,298
1.6%	26.705	2,097.423	1,355.506	941,324	6.6%	54.239	4,259.887	2,753.046	1,911,837
1.7%	27.527	2,161.975	1,397.224	970,294	6.7%	54.648	4,292.038	2,773.824	1,926,267
1.8%	28.325	2,224.654	1,437.731	998,425	6.8%	55.054	4,323.949	2,794.447	1,940,588
1.9%	29.101	2,285.614	1,477.128	1,025,784	6.9%	55.458	4,355.627	2,814.920	1,954,805
2.0%	29.857	2,344.991	1,515.502	1,052,432	7.0%	55.858	4,387.076	2,835.244	1,968,920
2.1%	30.595	2,402.900	1,552.927	1,078,422	7.1%	56.256	4,418.301	2,855.424	1,982,934
2.2%	31.315	2,459.447	1,589.472	1,103,800	7.2%	56.650	4,449.307	2,875.463	1,996,849
2.3%	32.018	2,514.722	1,625.195	1,128,607	7.3%	57.042	4,480.099	2,895.362	2,010,668
2.4%	32.707	2,568.809	1,660.149	1,152,881	7.4%	57.432	4,510.680	2,915.126	2,024,393
2.5%	33.382	2,621.779	1,694.383	1,176,655	7.5%	57.819	4,541.055	2,934.757	2,038,026
2.6%	34.043	2,673.701	1,727.938	1,199,957	7.6%	58.203	4,571.229	2,954.257	2,051,567
2.7%	34.691	2,724.633	1,760.854	1,222,815	7.7%	58.584	4,601.204	2,973.629	2,065,020
2.8%	35.328	2,774.630	1,793.166	1,245,254	7.8%	58.964	4,630.986	2,992.876	2,078,386
2.9%	35.953	2,823.743	1,824.906	1,267,296	7.9%	59.340	4,660.577	3,012.000	2,091,667
3.0%	36.568	2,872.015	1,856.103	1,288,961	8.0%	59.715	4,689.982	3,031.004	2,104,864
3.1%	37.172	2,919.490	1,886.785	1,310,267	8.1%	60.087	4,719.203	3,049.889	2,117,978
3.2%	37.767	2,966.205	1,916.975	1,331,233	8.2%	60.457	4,748.244	3,068.657	2,131,012
3.3%	38.352	3,012.195	1,946.697	1,351,873	8.3%	60.824	4,777.109	3,087.312	2,143,967
3.4%	38.929	3,057.494	1,975.973	1,372,203	8.4%	61.189	4,805.801	3,105.855	2,156,843
3.5%	39.498	3,102.131	2,004.821	1,392,236	8.5%	61.553	4,834.322	3,124.287	2,169,644
3.6%	40.058	3,146.135	2,033.259	1,411,985	8.6%	61.914	4,862.676	3,142.612	2,182,369
3.7%	40.610	3,189.532	2,061.305	1,431,462	8.7%	62.272	4,890.866	3,160.830	2,195,021
3.8%	41.156	3,232.347	2,088.975	1,450,677	8.8%	62.629	4,918.894	3,178.944	2,207,600
3.9%	41.694	3,274.601	2,116.283	1,469,641	8.9%	62.984	4,946.763	3,196.955	2,220,107
4.0%	42.225	3,316.318	2,143.243	1,488,363	9.0%	63.337	4,974.477	3,214.865	2,232,545
4.1%	42.749	3,357.516	2,169.868	1,506,853	9.1%	63.688	5,002.036	3,232.676	2,244,914
4.2%	43.267	3,398.214	2,196.171	1,525,119	9.2%	64.037	5,029.445	3,250.389	2,257,215
4.3%	43.779	3,438.431	2,222.162	1,543,168	9.3%	64.384	5,056.705	3,268.007	2,269,449
4.4%	44.286	3,478.183	2,247.853	1,561,009	9.4%	64.729	5,083.819	3,285.530	2,281,618
4.5%	44.786	3,517.486	2,273.253	1,578,648	9.5%	65.073	5,110.789	3,302.960	2,293,722
4.6%	45.281	3,556.355	2,298.372	1,596,092	9.6%	65.414	5,137.617	3,320.298	2,305,763
4.7%	45.770	3,594.803	2,323.220	1,613,347	9.7%	65.754	5,164.306	3,337.547	2,317,741
4.8%	46.255	3,632.844	2,347.805	1,630,420	9.8%	66.092	5,190.858	3,354.706	2,329,657
4.9%	46.734	3,670.491	2,372.136	1,647,316	9.9%	66.428	5,217.275	3,371.779	2,341,513
5.0%	47.209	3,707.756	2,396.219	1,664,041	10.0%	66.763	5,243.559	3,388.765	2,353,309

SAMPLE PLANS

Appendix IX

a – Sample Water Drawing {11} {23} {28} {33} {38}
b – Sample Combined Sewer Drawing (S-1) {43} {44} {59} {70} {74}
c – Sample Sewer Match Line Drawing (S-3)
d – Sample Separate Sewer Drawing
e – Sample Roadway Grading Drawing

Plan Revisions Not Shown On Sample Plans

1. Property Lines will be a new dash dot style.
2. The confirmed curb is as shown on the City Plan. When the confirmed curb and physical curb or edge of paving are in the same location it will be defined as the Curbline. If the confirmed curb and physical curb or edge of paving are not in the same location, the confirmed curb will be a dashed line with a lesser weight (and called out) and the physical curb or edge of paving will be a solid line with a lesser weight line (and called out).
3. Appendix IIk (Manholes, Inlets and Appurtenances) will be changed to add a number (4 or 6 indicating 4'or 6'respactively) over the symbol for existing Open Mouth Grate Inlets and Highway Grate Inlets.
4. Delete "and angles" from Sections 2 D.1.a) (page 2-2) and 3 D.1.a) (page 3-2). It would then read: "Houseline distance, street and Right-of-way widths, name of street and legislative route number if it is a state highway (see Appendix Vi [52] for a list of state highway route numbers).
5. Base Plans will be changed to have redundant utility **dimensions** at both ends of the block when there is no change in dimension if the block distance is over 250 feet.
6. Base Plans will be changed to have redundant utility **call-outs** at both ends of the block if the block distance is over 250 feet.
7. Diagonal lines (typically along the houseline) to indicate a building exists will not be accepted.
8. On a larger sewer a manhole should be shown in the center of the sewer (unless it is an offset manhole) instead of being to one side of the sewer where it is found in the field and/or shown on the return plan.
9. Civil or Mechanical dimensioning shall be accepted on cross sections.
10. Match Lines on sewer sheets should include a grayed-out intersection in the plan view where applicable (when the profile extends into the intersection). The profile would not be grayed-out. No call outs are required in the intersection but any other numbers or letters should be oriented correctly.
11. GPIS numbers shall be included in the title block as shown in Appendix IIc & d.
12. Total number of sheets text in the title block shall be removed.

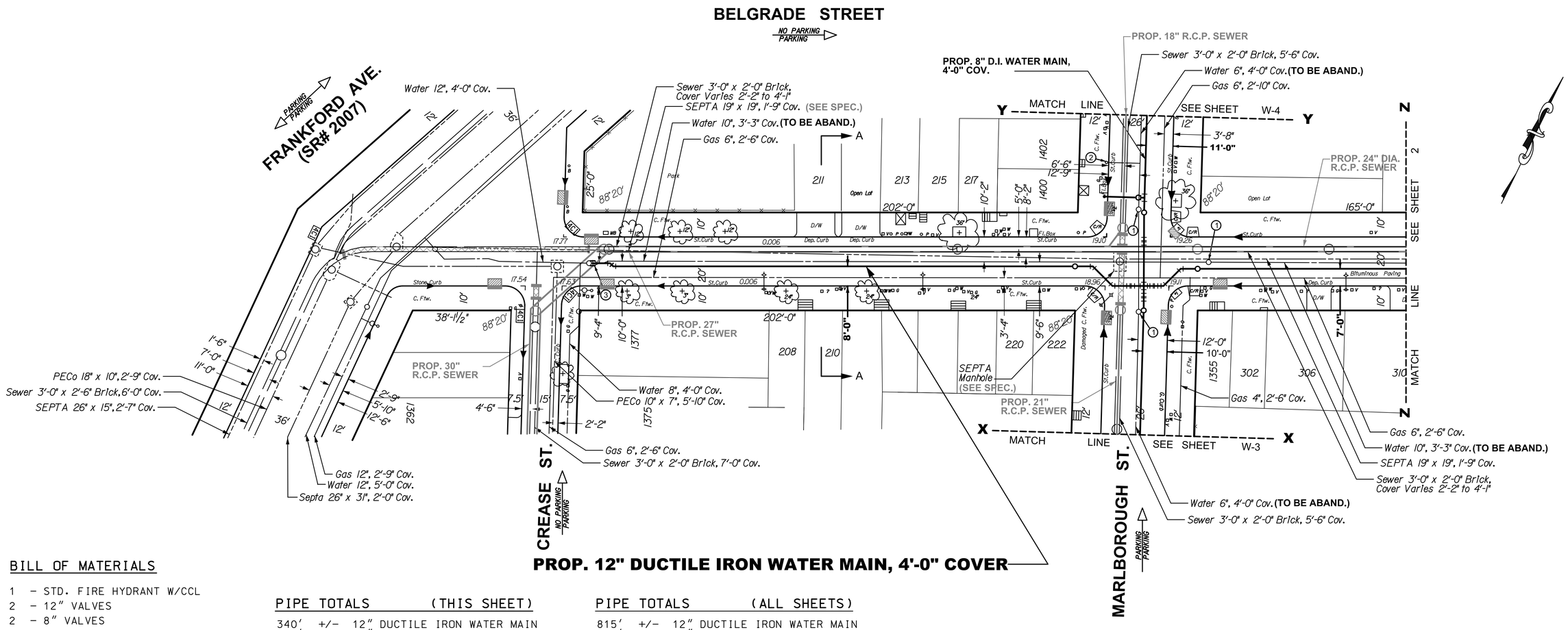

BILL OF MATERIALS

1 - STD. FIRE HYDRANT W/CCL
2 - 12" VALVES
2 - 8" VALVES
1 - 6" VALVE
1 - 12"X8" CROSS
1 - 8"x6" HYDRANT ANCHOR TEE
10 - 12" - 1/8 BENDS (4 VERT.)
4 - 8" - 1/8 BENDS (4 VERT.)
1 - 12" SLEEVE

PIPE TOTALS (THIS SHEET)

340'	+/-	12"	DUCTILE IRON WATER MAIN
130'	+/-	8"	DUCTILE IRON WATER MAIN
20'	+/-	6"	DUCTILE IRON WATER MAIN

PIPE TOTALS (ALL SHEETS)

815'	+/-	12"	DUCTILE IRON WATER MAIN
5'	+/-	10"	DUCTILE IRON WATER MAIN
875'	+/-	8"	DUCTILE IRON WATER MAIN
55'	+/-	6"	DUCTILE IRON WATER MAIN

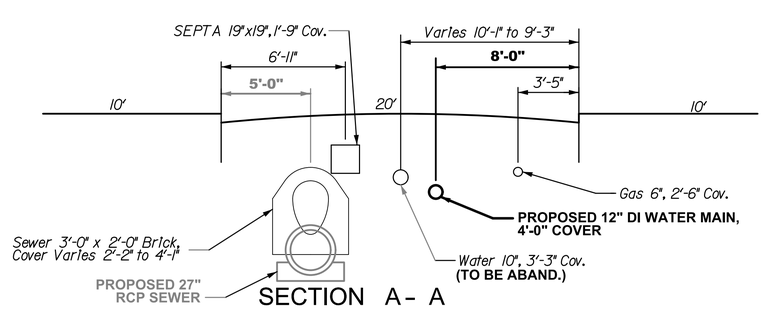

SECTION A- A

SCALE: 1/4" - 1'-0"

NOTES:

1. REMOVE FRAME & COVER - SEE SPEC'S.
2. REMOVE FIRE HYDRANT - SEE SPEC'S.
3. REMOVE PIPE AND/OR FITTING & RECONNECT.
4. ROTATE FITTINGS AS REQUIRED.

GENERAL NOTES:

- EXISTING WATER MAINS SHALL BE CUT & PLUGGED AS APPROVED BY THE CITY ENGINEER.
- THE CONTRACTOR SHALL MAINTAIN A MINIMUM 6-INCH CLEARANCE BETWEEN ALL UNDERGROUND STRUCTURES AND THE NEW WATER MAINS.
- BILLS OF MATERIAL AND PIPE TOTALS ARE FOR THE CONVENIENCE OF THE CONTRACTOR ONLY AND PAYMENT WILL BE MADE ONLY FOR THE ACTUAL AMOUNT OF PIPE AND APPURTENANCES INSTALLED.
- FIRE HYDRANTS SHALL NOT BE CONSTRUCTED OR RELOCATED UNTIL SUCH LOCATIONS HAVE BEEN APPROVED BY THE WATER DEPARTMENT CONSTRUCTION DIVISION IN THE FIELD.
- ALL DISTANCES SHOWN ARE IN DISTRICT STANDARD MEASUREMENT.

NOTICE:

PURSUANT TO THE REQUIREMENTS OF PENNSYLVANIA ACT 287 OF 1974 (THE UNDERGROUND UTILITY LINE PROTECTION ACT), AS AMENDED BY PA ACT 199 OF 2004, THE CONTRACTOR SHALL CONTACT THE PENNSYLVANIA ONE CALL SYSTEM AT 1-800-242-1776, AT LEAST 3 DAYS PRIOR TO EXCAVATION.

HIGHWAY DISTRICT NO. 3 WARD NO. 18
SURVEY DISTRICT NO. 5 WATER PLATE NO. 39
ONE CALL SERIAL NO. 1036047

WATER MAIN RELAY PROJECT

BELGRADE STREET
FROM
CREASE ST. TO MARLBOROUGH ST.

APPROVED _____ CHIEF, DESIGN BRANCH, ENGINEERING DIVISION
APPROVED _____ GENERAL MANAGER, PLANNING AND ENGINEERING
APPROVED _____ WATER COMMISSIONER

CITY OF PHILADELPHIA
WATER DEPARTMENT

SCALES:
PLAN 1" = 20'
AND AS NOTED

WORK NO. S-40599-RD (12 SHEETS)
SHEET NO. W-1 OF 8 SHEETS

DRAWN BY	CW	1/13/2014
PROJECT ENGR.	W. EL-MORSHEDY	2/11/2014
SUPERVISOR		DATE

These Sample Plans are being updated.
See Page 277 (Appendix IX cover page) for changes.

CONTROLLING BENCHMARK:
Marble PINth on Northeast Corner of Palmer and Thompson ST.130' Palmer Elev.21.27

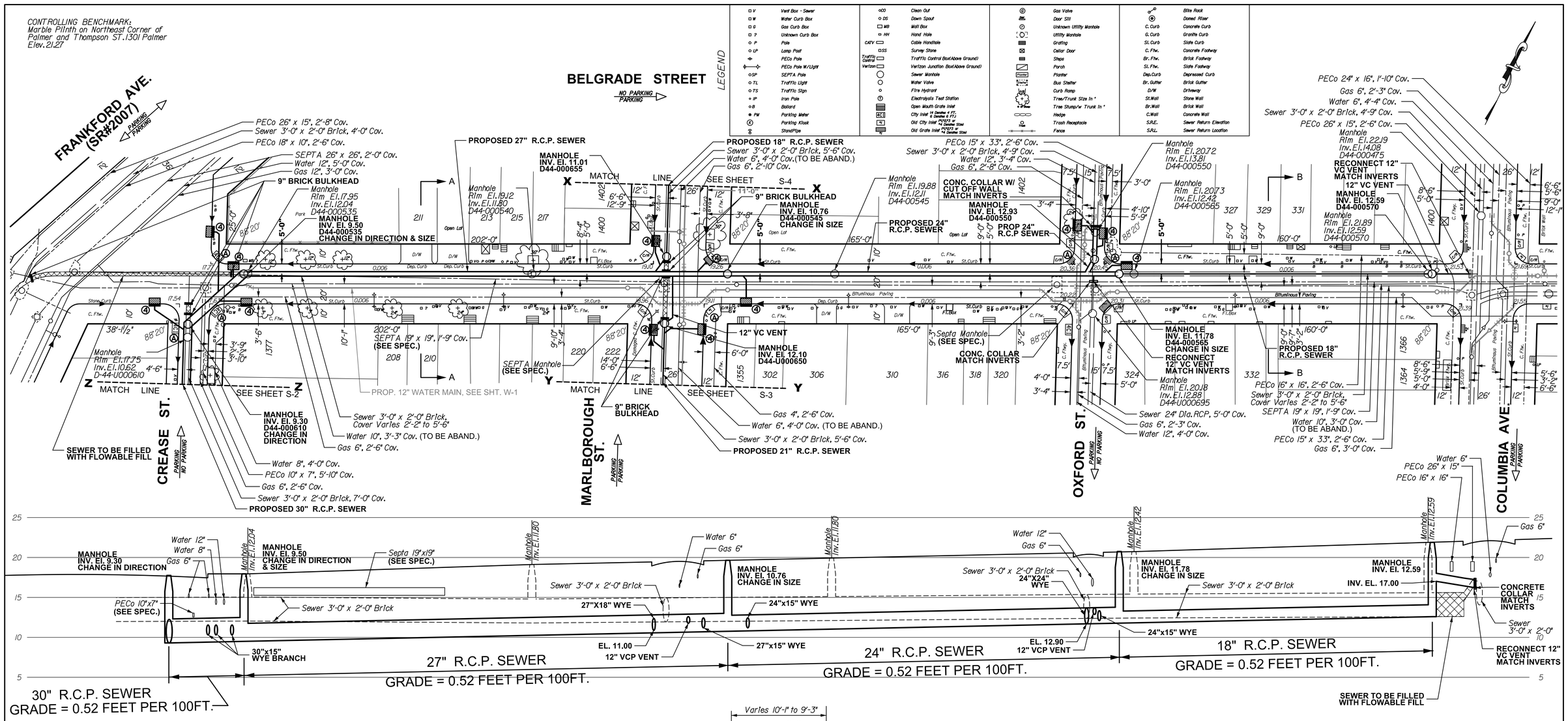

LEGEND

V	Vent Box - Sewer	CO	Clean Out		Gas Valve		Bitte Rock
W	Water Curb Box	DS	Down Spout		Door Sill		Domed Riser
G	Gas Curb Box	MB	Mail Box		Unknown Utility Manhole	C.Curb	Concrete Curb
?	Unknown Curb Box	HH	Hand Hole		Utility Manhole	G.Curb	Granite Curb
P	Pole	CATV	Cable Handhole		Grating	Sl.Curb	Slate Curb
LP	Lamp Post	SS	Survey Stone		Cellar Door	C.Flw.	Concrete Footway
	PECo Pole	Traffic Control	Traffic Control Box(Above Ground)		Steps	Br.Flw.	Brick Footway
	PECo Pole W/Light	Verizon	Verizon Junction Box(Above Ground)		Porch	Sl.Flw.	Slate Footway
SP	SEPTA Pole		Sewer Manhole		Planter	Dep.Curb	Depressed Curb
TL	Traffic Light		Water Valve		Bus Shelter	Br. Gutter	Brick Gutter
TS	Traffic Sign		Fire Hydrant		Curb Ramp	D/W	Driveway
IP	Iron Pole		Electrolysis Test Station		Tree/Trunk Size In "	St.Wall	Stone Wall
B	Bollard		Open Mouth Grate Inlet		Tree Stump/w Trunk In "	Br.Wall	Brick Wall
PM	Parking Meter	4CI	City Inlet 14 Gauge 4 FT., 6 Gauge 6 FT.2		Hedge	C.Wall	Concrete Wall
K	Parking Kiosk		Old City Inlet 10"2FT.3 or 14 Gauge Steel		Trash Receptacle	S.R.E.	Sewer Return Elevation
	Standpipe		Old Grate Inlet 10"2FT.3 or 14 Gauge Steel		Fence	S.R.L.	Sewer Return Location

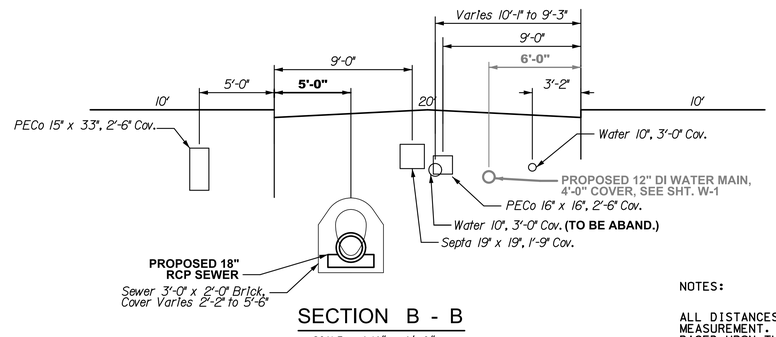

SECTION B - B

SCALE: 1/4" = 1'-0"

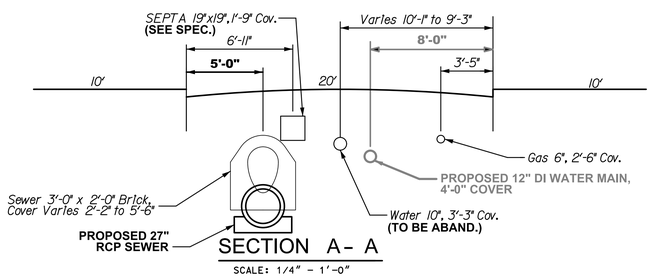

SECTION A- A

SCALE: 1/4" = 1'-0"

These Sample Plans are being updated.
See Page 277 (Appendix IX cover page) for changes.

NOTES:

ALL DISTANCES SHOWN ARE IN DISTRICT STANDARD MEASUREMENT. PAYMENT FOR ALL WORK WILL BE BASED UPON THAT STANDARD.

THE LOCATIONS AND ELEVATIONS OF THE EXISTING SEWERS ARE APPROXIMATE. THE ELEVATIONS OF THE EXISTING SEWER AT THE TERMINATING CONNECTION POINTS TO THE PROPOSED SEWER MUST BE FIELD CHECKED PRIOR TO CONSTRUCTING THE NEW SEWER.

THE THICKNESS OF THE ARCHES AND THE CHARACTER AND THE EXTENT OF THE CRADLES OF THE EXISTING SEWERS ARE UNKNOWN

④ DENOTES 4 FT. OPEN MOUTH GRATE INLET.

④ DENOTES 4 FT. CITY INLET.

④ DENOTES 4 FT. HIGHWAY GRATE INLET.

Ⓐ DENOTES EXISTING INLET TO BE ABANDONED.

NOTICE:

PURSUANT TO THE REQUIREMENTS OF PENNSYLVANIA ACT 287 OF 1974 (THE UNDERGROUND UTILITY LINE PROTECTION ACT), AS AMENDED BY PA ACT 199 OF 2004, THE CONTRACTOR SHALL CONTACT THE PENNSYLVANIA ONE CALL SYSTEM AT 1-800-242-1776, AT LEAST 3 DAYS PRIOR TO EXCAVATION.

HIGHWAY DISTRICT NO. 3 WARD NO. 18

SURVEY DISTRICT NO. 5 DRAINAGE PLAT. NO. 42 OUTFALL NO. D-44

ONE CALL SERIAL NO. 1036047,1036056

SEWER RECONSTRUCTION PROJECT

BELGRADE STREET

FROM

FRANKFORD AVE. TO COLUMBIA AVE.

CITY OF PHILADELPHIA
WATER DEPARTMENT

APPROVED _____ CHIEF, DESIGN BRANCH, ENGINEERING DIVISION

APPROVED _____ GENERAL MANAGER, PLANNING AND ENGINEERING

APPROVED _____ WATER COMMISSIONER

SCALES:

PLAN		1"= 20'
PROFILE	HORZ.	1"= 20'
	VERT.	1"= 5'

WORK NO. S-40599-RD(12 SHEETS)
SHEET NO. S-1 OF 4 SHEETS

DRAWN BY	CW	1/13/2011
PROJECT ENGR.	W. EL-MORSHEDY	2/11/2011
SUPERVISOR		DATE

CONTROLLING BENCHMARK:
Marble Plinth on Northeast Corner of Palmer and Thompson ST.130l Palmer Elev.21.27

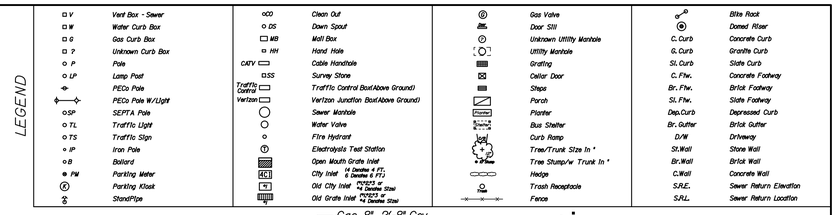

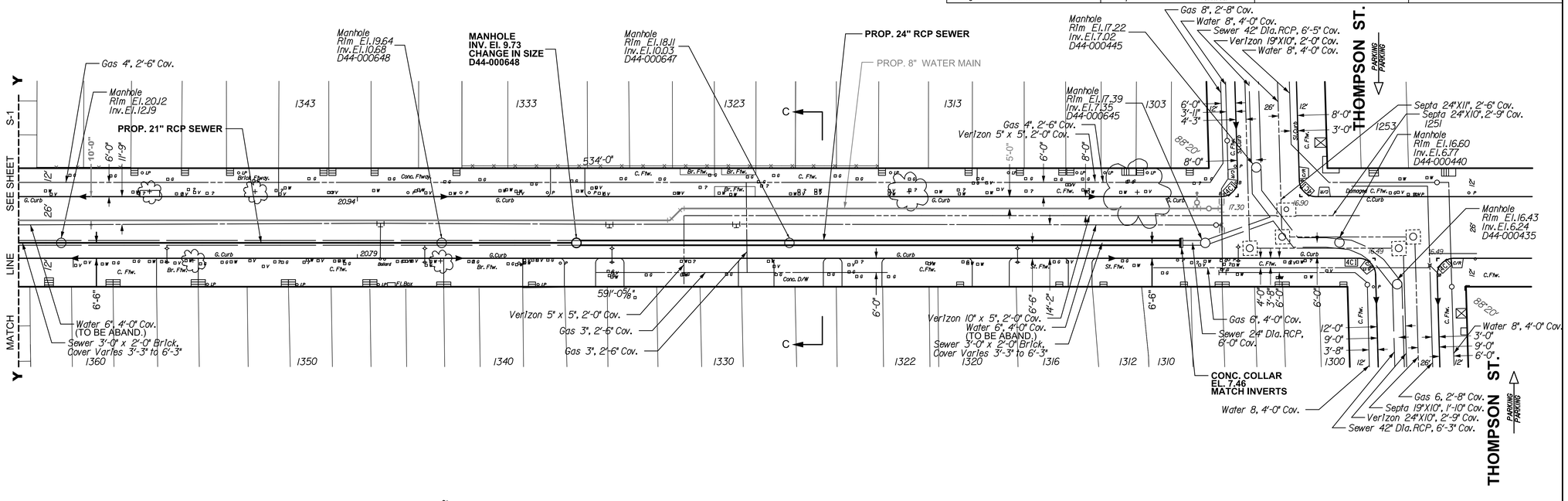

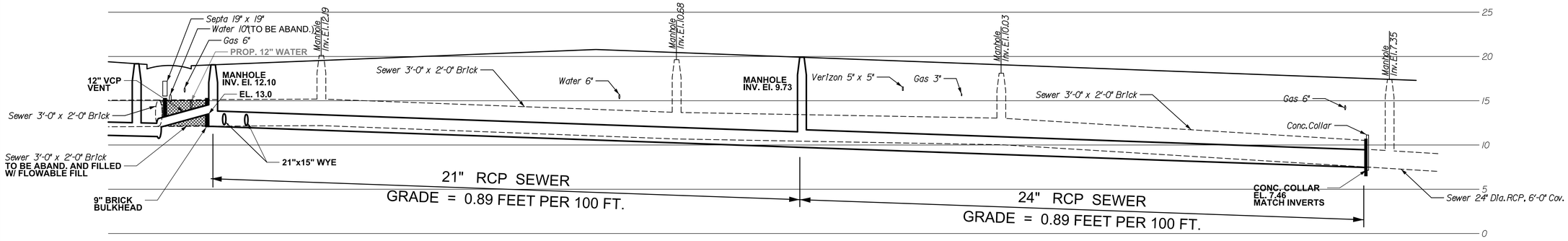

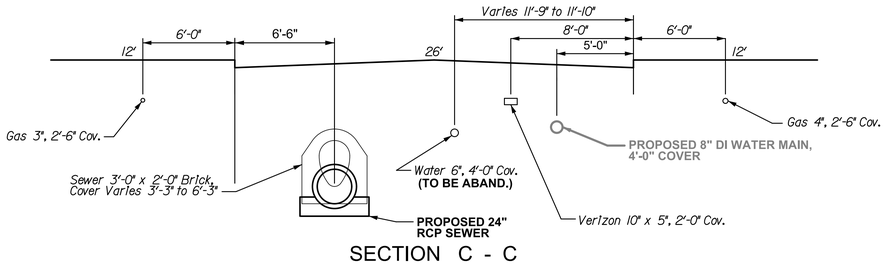

SECTION C - C

SCALE: 1/4" - 1'-0"

NOTICE:

PURSUANT TO THE REQUIREMENTS OF PENNSYLVANIA ACT 287 OF 1974 (THE UNDERGROUND UTILITY LINE PROTECTION ACT), AS AMENDED BY PA ACT 199 OF 2004, THE CONTRACTOR SHALL CONTACT THE PENNSYLVANIA ONE CALL SYSTEM AT 1-800-242-1776, AT LEAST 3 DAYS PRIOR TO EXCAVATION.

HIGHWAY DISTRICT NO. 3 WARD NO. 18

SURVEY DISTRICT NO. 5 DRAINAGE PLAT. NO. 42 OUTFALL NO. D-44

ONE CALL SERIAL NO. 1036072

NOTES:

ALL DISTANCES SHOWN ARE IN DISTRICT STANDARD MEASUREMENT. PAYMENT FOR ALL WORK WILL BE BASED UPON THAT STANDARD.

THE LOCATIONS AND ELEVATIONS OF THE EXISTING SEWERS ARE APPROXIMATE. THE ELEVATIONS OF THE EXISTING SEWER AT THE TERMINATING CONNECTION POINTS TO THE PROPOSED SEWER MUST BE FIELD CHECKED PRIOR TO CONSTRUCTING THE NEW SEWER.

THE THICKNESS OF THE ARCHES AND THE CHARACTER AND THE EXTENT OF THE CRADLES OF THE EXISTING SEWERS ARE UNKNOWN

SEWER RECONSTRUCTION PROJECT

MARLBOROUGH STREET

FROM

BELGRADE ST. TO THOMPSON ST.

APPROVED _____
CHIEF. DESIGN BRANCH. ENGINEERING DIVISION

CITY OF PHILADELPHIA
WATER DEPARTMENT

SCALES:

PLAN		1"= 20'
PROFILE	HORZ.	1"= 20'
	VERT.	1"= 5'

WORK NO. S-40599-RD(12 SHEETS)
SHEET NO. S-3 OF 4 SHEETS

DRAWN BY	CW	1/13/2014
PROJECT ENGR.	W. EL-MORSHEDY	2/1/2014
SUPERVISOR		DATE

These Sample Plans are being updated.
See Page 277 (Appendix IX cover page) for changes.

CONTROLLING BENCHMARK:
Survey Monument Found at N.W.C. of
Kelvin Street & Regina Street Elevation = 182.69

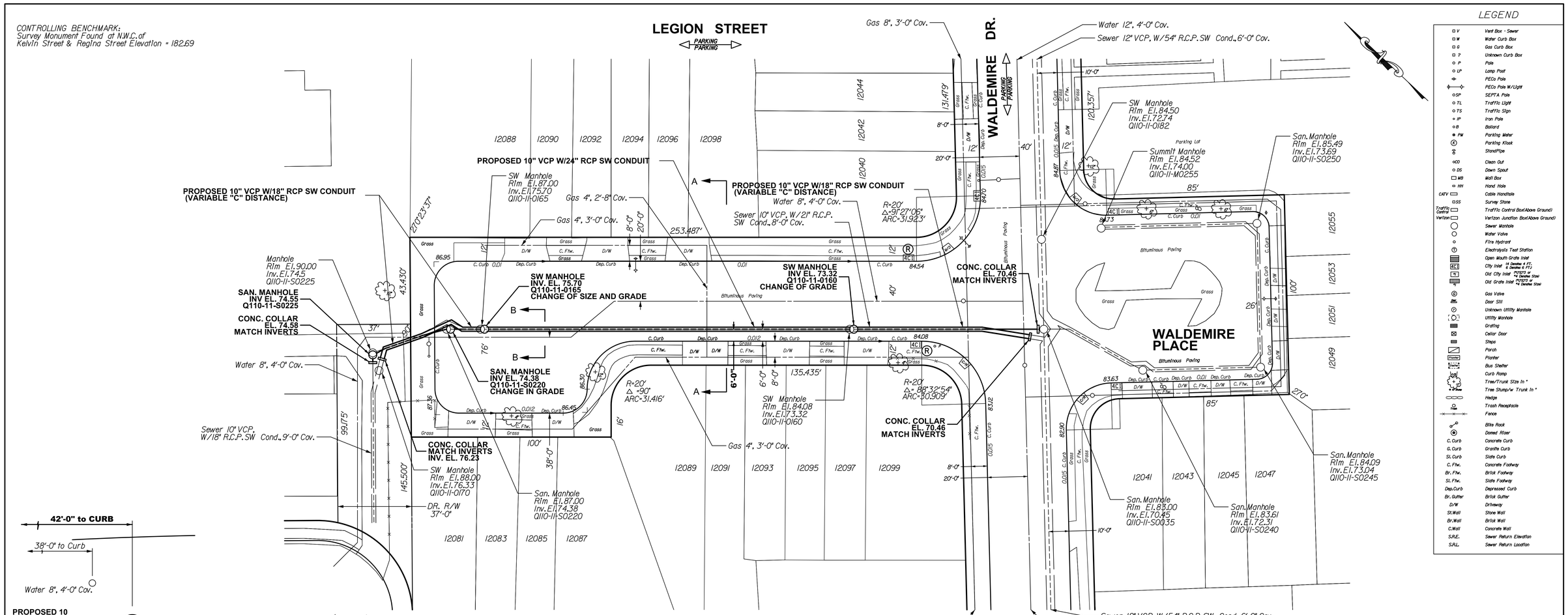

NOTES:

ALL DISTANCES SHOWN ARE IN DISTRICT STANDARD MEASUREMENT. PAYMENT FOR ALL WORK WILL BE BASED UPON THAT STANDARD.

THE LOCATIONS AND ELEVATIONS OF THE EXISTING SEWERS ARE APPROXIMATE. THE ELEVATIONS OF THE EXISTING SEWER AT THE TERMINATING CONNECTION POINTS TO THE PROPOSED SEWER MUST BE FIELD CHECKED PRIOR TO CONSTRUCTING THE NEW SEWER.

THE THICKNESS OF THE ARCHES AND THE CHARACTER AND THE EXTENT OF THE CRADLES OF THE EXISTING SEWERS ARE UNKNOWN

Ⓡ DENOTES EXISTING INLET TO BE RECONNECTED.

These Sample Plans are being updated.
See Page 277 (Appendix IX cover page) for changes.

NOTICE:
PURSUANT TO THE REQUIREMENTS OF PENNSYLVANIA ACT 287 OF 1974 (THE UNDERGROUND UTILITY LINE PROTECTION ACT), AS AMENDED BY PA ACT 199 OF 2004, THE CONTRACTOR SHALL CONTACT THE PENNSYLVANIA ONE CALL SYSTEM AT 1-800-242-1776, AT LEAST 3 DAYS PRIOR TO EXCAVATION.

HIGHWAY DISTRICT NO. 6 WARD NO. 66
SURVEY DISTRICT NO. 4 DRAINAGE PLAT NO. 111 OUTFALL NO. Q-110-11
ONE CALL SERIAL NO. 20103021162

SEWER RECONSTRUCTION PROJECT

LEGION STREET
FROM
ABBY RD TO WALDEMIRE DR.

APPROVED _____
CHIEF, DESIGN BRANCH, ENGINEERING DIVISION

CITY OF PHILADELPHIA
WATER DEPARTMENT

SCALES:
PLAN 1"= 20'
PROFILE HORZ. 1"= 20'
VERT. 1"= 5'

WORK NO. S-40740-R
SHEET NO. S-2 OF 3 SHEETS

DRAWN BY	TK	
PROJECT ENGR.	S. VLAM	
SUPERVISOR		DATE

SAMPLE APPENDIX IXd Back to Appendix IX

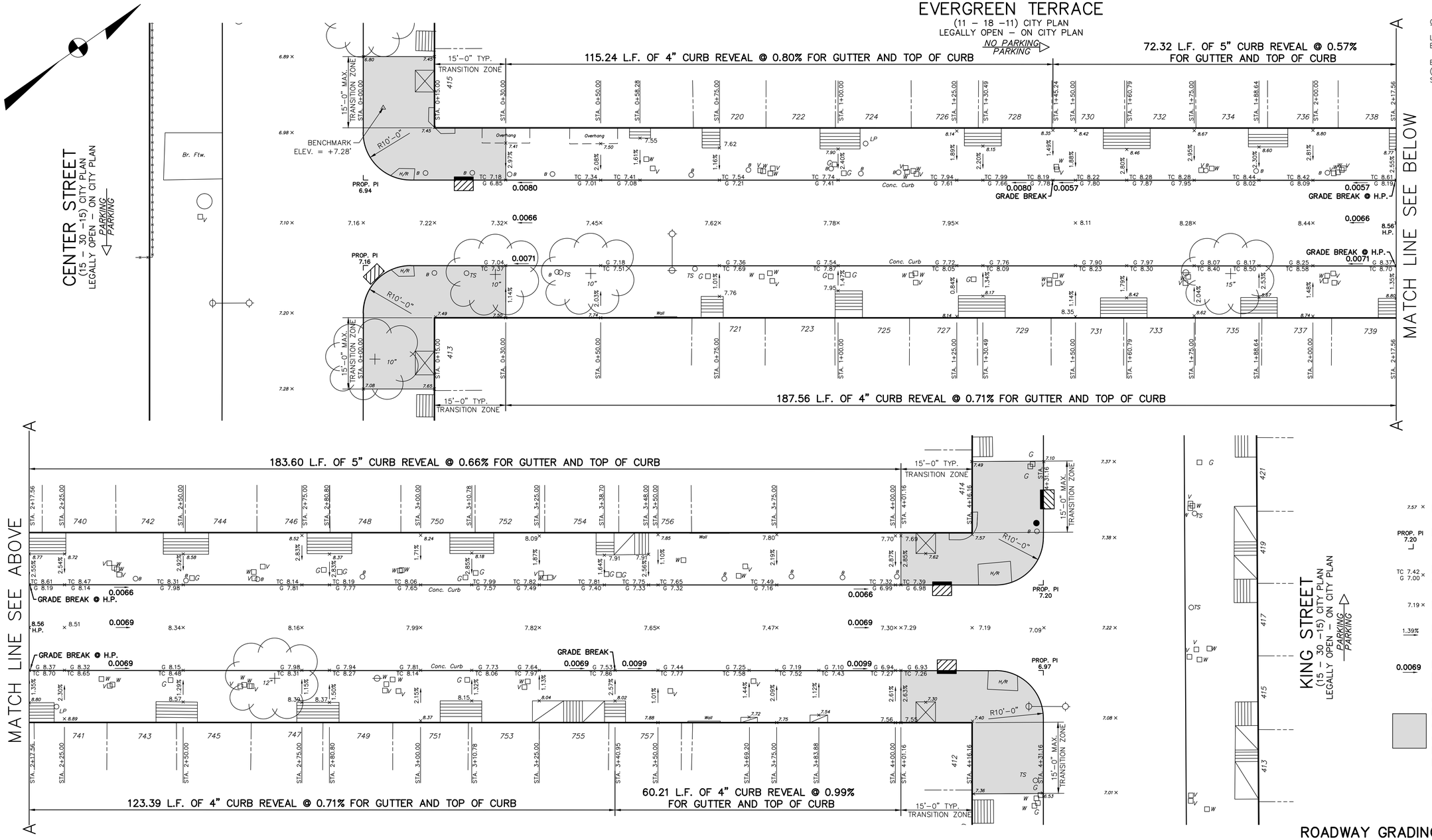

CONTROLLING BENCHMARK

LOCATED AT THE NORTHWEST CORNER OF EVERGREEN TERRACE AND CENTER STREET

BENCHMARK ELEVATION = +7.28' CITY DATUM (PAINT MARKING ON SIDEWALK FROM SECOND SURVEY DISTRICT)

LEGEND

7.57 ×	EXISTING SPOT ELEVATION
PROP. PI 7.20	PROPOSED PI ELEVATION (AT TOP OF CURB)
TC 7.42 × G 7.00 ×	PROPOSED GUTTER & TOP OF CURB ELEVATION
7.19 ×	PROPOSED SPOT ELEVATION
1.39%	PROPOSED FOOTWAY CROSS SLOPE
0.0069	PROPOSED ROADWAY LONGITUDINAL SLOPE
	CURB RAMP RECONSTRUCTION ZONE (15' FROM HOUSE LINE CORNER) DETAILED IN CURB RAMP DESIGN DRAWINGS

ROADWAY GRADING PLAN

0 5' 10' 20'

SCALE: 1" = 10'-0"

NOTICE:
PURSUANT TO THE REQUIREMENTS OF PENNSYLVANIA ACT 287 OF 1974 (THE UNDERGROUND UTILITY LINE PROTECTION ACT), AS AMENDED BY PA ACT 199 OF 2004, THE CONTRACTOR SHALL CONTACT THE PENNSYLVANIA ONE CALL SYSTEM AT 1–800–242–1776, AT LEAST 3 DAYS PRIOR TO EXCAVATION.

HIGHWAY DISTRICT No. 1 WARD No. 39
SURVEY DISTRICT No. 2 WATER PLATE No. 13 PA ONE CALL SERIAL No. 01123581321

ALL DIMENSIONS MUST BE VERIFIED BY CONTRACTOR AND OWNER MUST BE NOTIFIED OF ANY DISCREPANCIES BEFORE PROCEEDING WITH THE WORK.

DATE

EVERGREEN TERRACE
FROM
CENTER STREET TO KING STREET

CITY OF PHILADELPHIA
DEPARTMENT OF STREETS

APPROVED
DISTRICT SURVEYOR, DEPARTMENT OF STREETS

SCALES:
PLAN 1" = 10'
AND AS NOTED

PWD WORK NO. S–31415–RDG
SHEET NO. R– 1 OF 5 SHEETS

These Sample Plans are being updated.
See Page 277 (Appendix IX cover page) for changes.